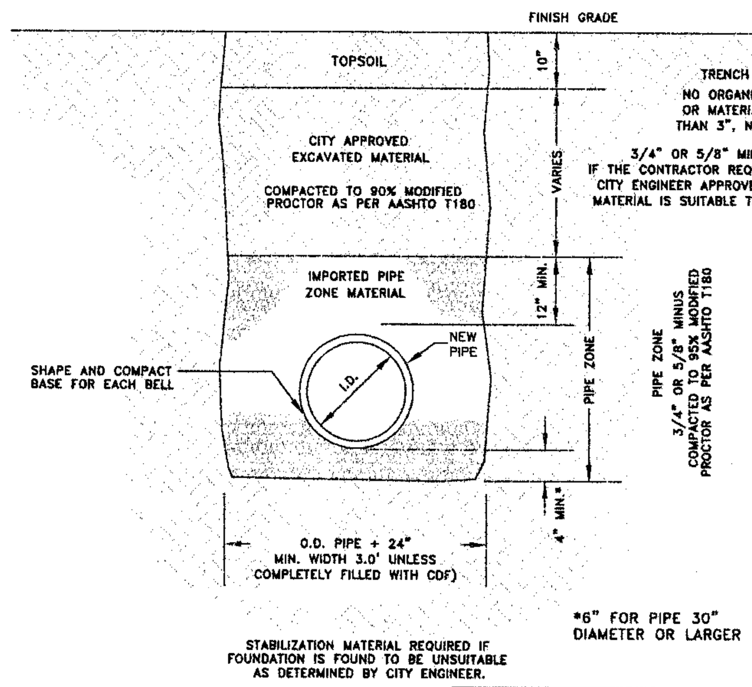

CLASS 'A' BACKFILL SHALL BE USED IN AREAS OUTSIDE OF RIGHT-OF-WAY AND WHERE THERE IS TO BE RE-VEGETATION.

NOTES:

1. CONTRACTOR SHALL COMPLY WITH THE MOST CURRENT OSHA REQUIREMENTS FOR EXCAVATIONS.
2. CLASS 'A' BACKFILL SHALL COMPLY WITH THE REQUIREMENTS OF THE CITY'S STANDARD CONSTRUCTION SPECIFICATIONS.
3. TRENCH MATERIAL SHALL BE PLACED IN MAX. 6" LIFTS.
4. IN EXISTING RIGHT-OF-WAY TRENCH EXCAVATION SHALL NOT BE MORE THAN 100 FEET AHEAD OF THE PIPE LAYING OPERATION.
5. TRENCHES ARE TO BE BACKFILLED AT THE END OF EACH DAY.
6. ANY ALTERATIONS TO THIS STANDARD MUST HAVE WRITTEN APPROVAL BY CITY ENGINEER.
7. SPECIFICATIONS REGARDING PIPE BEDDING AND TRENCH BACKFILL WILL FOLLOW ISPWC SECTION 305 AND 306, UNLESS ABOVE STANDARDS ARE MORE RESTRICTIVE.

BACKFILL
CLASS 'A'
CITY OF LEWISTON
STD. DWG 1-4

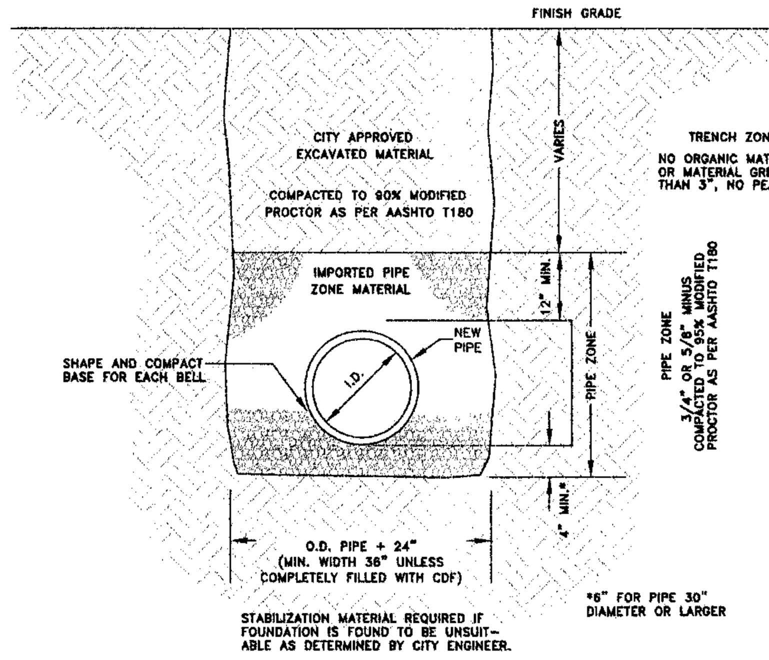

CLASS 'C' BACKFILL SHALL BE USED IN AREAS WITHIN RIGHT-OF-WAY WHERE ASPHALT PAVEMENT, CONCRETE CURB, SIDEWALK, DRIVEWAY, AND GRAVEL SURFACING IS NOT ANTICIPATED.

NOTES:

1. CONTRACTOR SHALL COMPLY WITH THE MOST CURRENT OSHA REQUIREMENT FOR EXCAVATIONS.
2. CLASS 'C' BACKFILL SHALL COMPLY WITH REQUIREMENTS OF THE CITY'S STANDARDS CONSTRUCTION SPECIFICATIONS.
3. TRENCH MATERIAL SHALL BE PLACED IN MAX. OF 6" LIFTS.
4. IN EXISTING RIGHT-OF-WAY TRENCH EXCAVATION SHALL NOT BE MORE THAN 100 FEET AHEAD OF THE PIPE LAYING OPERATION.
5. TRENCHES ARE TO BE BACKFILLED AT THE END OF EACH DAY.
6. ANY ALTERATIONS TO THIS STANDARD MUST HAVE WRITTEN APPROVAL BY CITY ENGINEER.
7. WITHIN RETENTION SWALE, COMPACTION EFFORT OUTLINED BY ENGINEER OF RECORD AND APPROVED BY CITY ENGINEER, TO ALLOW FOR INFILTRATION.
8. SPECIFICATIONS REGARDING PIPE BEDDING AND TRENCH BACKFILL WILL FOLLOW ISPWC SECTION 305 AND 306, UNLESS ABOVE STANDARDS ARE MORE RESTRICTIVE.

BACKFILL
CLASS 'C'
CITY OF LEWISTON
STD. DWG 1-5

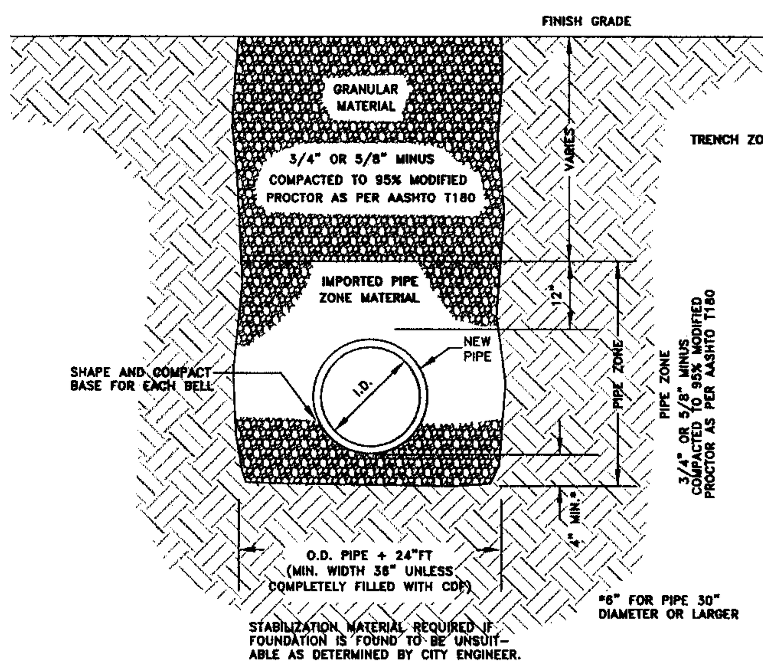

CLASS 'D' BACKFILL SHALL BE USED IN AREAS WHERE ASPHALT PAVEMENT, CONCRETE CURB, SIDEWALK, DRIVEWAY, GRAVEL SURFACING IS ANTICIPATED.

NOTES:

1. CONTRACTOR SHALL COMPLY WITH THE MOST CURRENT OSHA REQUIREMENTS FOR EXCAVATIONS.
2. CLASS 'D' BACKFILL SHALL COMPLY WITH REQUIREMENTS OF THE CITY'S STANDARDS CONSTRUCTION SPECIFICATIONS.
3. TRENCH MATERIAL SHALL BE PLACED IN MAX. OF 6" LIFTS.
4. IN EXISTING RIGHT-OF-WAY TRENCH EXCAVATION SHALL NOT BE MORE THAN 100 FEET AHEAD OF THE PIPE LAYING OPERATION.
5. TRENCHES ARE TO BE BACKFILLED AT THE END OF EACH DAY.
6. ANY ALTERATIONS TO THIS STANDARD MUST HAVE WRITTEN APPROVAL BY CITY ENGINEER.
7. SPECIFICATIONS REGARDING PIPE BEDDING AND TRENCH BACKFILL WILL FOLLOW ISPWC SECTION 305 AND 306, UNLESS ABOVE STANDARDS ARE MORE RESTRICTIVE.

BACKFILL
CLASS 'D'
CITY OF LEWISTON
STD. DWG 1-6

TRENCH EXCAVATION & BACKFILL DETAIL

NOT TO SCALE

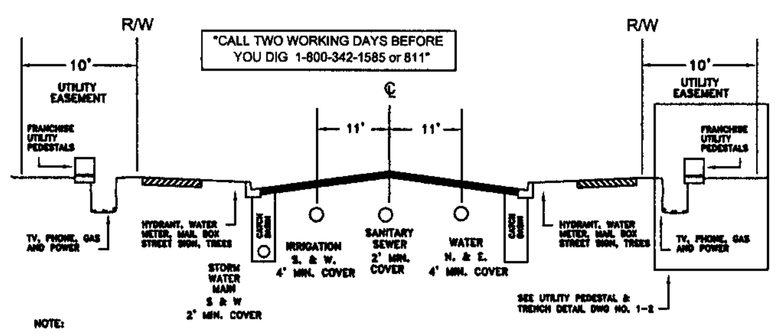

NOTE:

1. LOCATIONS OF EXISTING UTILITIES MUST BE FIELD LOCATED WITH THEIR RESPECTIVE OWNERS BEFORE DIGGING OR MAKING NEW CONNECTIONS.
2. SANITARY SEWER CAN VARY 4' FROM CENTERLINE AROUND CURVES, HOWEVER DEQ MINIMUM SEPARATION DISTANCES MUST BE MET.
3. WATER AND SEWER LATERALS SHALL BE STUBBED OUT TO FAR SIDE OF THE UTILITY EASEMENT AND CLEARLY MARKED AS PER CITY STANDARD.
4. STREET LIGHTING SHALL BE AT EACH INTERSECTION AND MID-BLOCK WITH A MAXIMUM SPACING OF 350' BETWEEN LIGHT POLES.
5. UTILITY POLES, FIRE HYDRANTS, LIGHT POLES, AND STREET SIGNS SHALL BE LOCATED WITH 1.5' MINIMUM CLEARANCE FROM BACK OF CURB TO CLOSEST FACE OF UTILITY AND SHALL NOT BE PLACED INTO SIDEWALK UNLESS APPROVED BY CITY ENGINEER AND DRAWING NO. 1-2.
6. UTILITY LOCATIONS SHALL ALSO CONFORM TO LATEST EDITION OF MUTCD.
7. ALL UTILITY FRAME AND LIDS TO BE LOCATED OUTSIDE OF WHEEL PATHS AREAS. THE TOP OF THE UTILITIES WILL HAVE A TOLERANCE OF +0 TO -1/4".
8. TREE SPECIES AND PLACEMENT WITHIN RIGHT-OF-WAY MUST HAVE WRITTEN APPROVAL OF CITY FORESTER AND CITY ENGINEER.
9. ANY DEVIATION FROM THESE STANDARD SHALL HAVE WRITTEN CONSENT OF THE CITY ENGINEER.

UTILITY LOCATIONS
CITY OF LEWISTON
STD. DWG 1-1

UTILITY LOCATION DETAIL

NOT TO SCALE

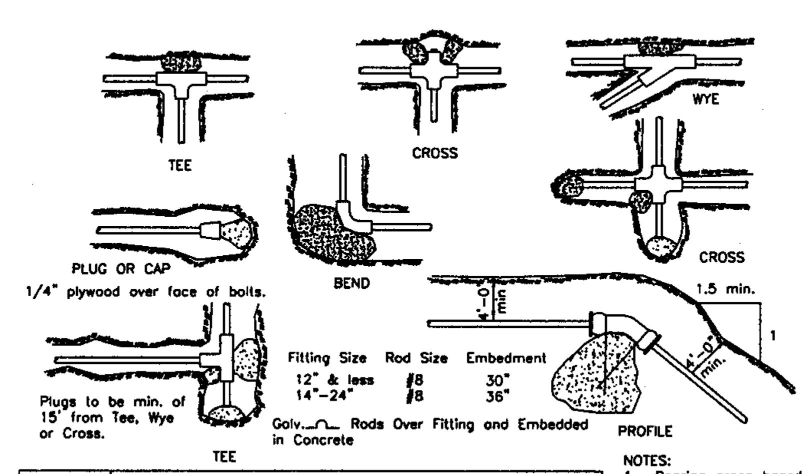

Fitting Size	BEARING AREA OF THRUST BLOCKS IN SQ. FT.				
	Tee, Wye, Plub or Cap	90° Bend Plugged Cross; Tee	45° Bend	22 1/2° Bend	11 1/4° Bend
4	1.0	1.4	1.0	--	--
6	2.1	3.0	1.6	1.0	--
8	3.8	5.3	2.9	1.5	1.0
10	5.9	8.4	4.6	2.4	1.2
12	8.5	12.0	6.6	3.4	1.7
14	11.5	16.3	8.9	4.6	2.3
16	15.0	21.3	11.6	6.0	3.0
18	19.0	27.0	14.6	7.6	3.8
20	23.5	33.3	18.1	9.4	4.7
24	34.0	48.0	26.2	13.6	6.8

Fitting Size	VOLUME OF THRUST BLOCK IN CU.YD.			
	90° BEND	45° BEND	22 1/2° BEND	11 1/4° BEND
4	--	--	--	--
6	1.3	--	--	--
8	2.3	1.1	--	--
10	3.7	1.8	--	--
12	5.5	2.8	1.2	--
14	7.6	3.9	1.7	--
16	9.9	5.1	2.3	0.9
18	--	6.3	3.2	1.4
20	--	7.7	4.0	1.8
24	--	11.1	5.7	2.6

NOTE:
Above volumes based on test pressure of 150 p.s.i. & the weight of concrete = 4050 lbs./cu.yd. To compare volumes for different test pressures use the following equation:

VOLUME = (150 p.s.i. test pressure) x (table value).

Thrust blocks for vertical up-bends shall be the same as for horizontal bends.

NOTES:
1. Bearing areas based on test pressure of 150 p.s.i. & soil bearing stress of 2,000 lbs. per sq.ft. To areas for different test pressure & soil bearing stresses, following equation: BEARING AREA = (150 p.s.i. test pressure)x(2000 lbs soil bearing stress)x(table value).
2. Concrete thrust blocking to be placed against undisturbed earth.
3. Keep concrete clear of joint and accessories.
4. The required thrust bearing areas for special connections are shown encircled on the plans;e.g. 15 indicates 15 sq. ft. bearing area required.
5. If not shown on plans, required bearing areas at fittings shall be as indicated above, adjusted if necessary, to conform to the test pressure(s) & allowable soil bearing stress(es) stated in the Special Specifications.
6. Bearing areas & special blocking details shown on plans take precedence over bearing areas & blocking details shown on this standard detail.
7. Concrete Compressive Strength shall be 2,500 p.s.i. minimum.
8. Concrete will be allowed 48 hrs. to set if high early yield concrete is used, otherwise, 7 days curing will be required.

THRUST BLOCKING DETAIL
CITY OF LEWISTON
STD. DWG 4-4

THRUST BLOCK DETAIL

NOT TO SCALE

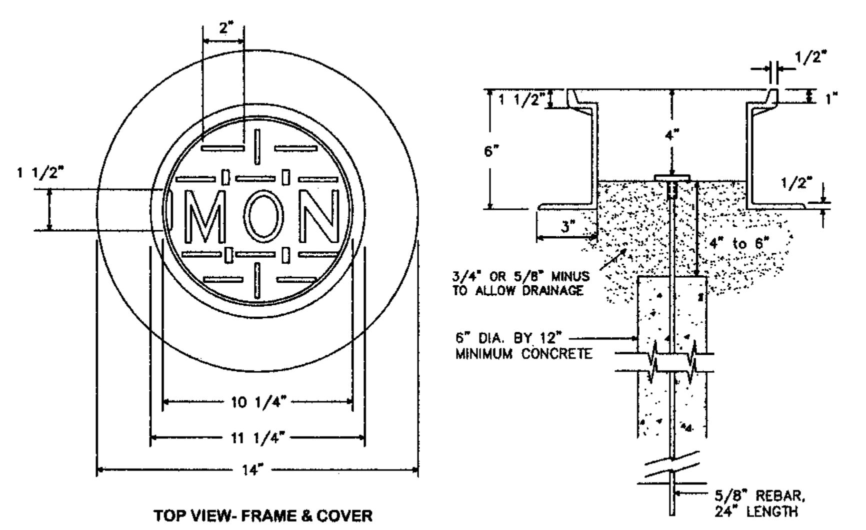

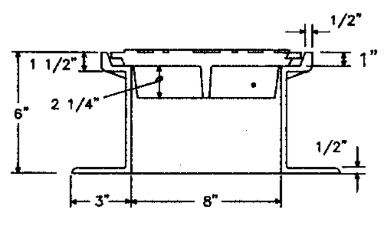

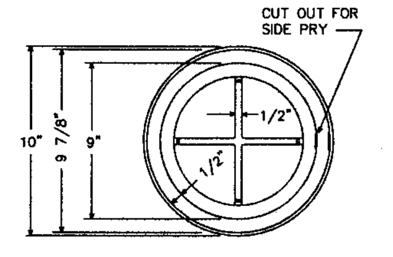

NOTES:
1. MONUMENT CASE SHALL BE OLYMPIC FOUNDRY INC. PART NO. M1010 OR APPROVED EQUAL. SEE CITY STD #1-10 ADJUST UTILITIES COLLARS.
2. MONUMENT INSTALLATION TO BE COMPLETED BY A LICENSED SURVEYOR AFTER COMPLETION OF STREET CONSTRUCTION.
3. MONUMENT SHALL CONSIST OF A METAL CAP ON A 5/8" DIAMETER BY 24" LONG DEFORMED STEEL BAR SET IN CONCRETE. THE CAP SHALL BE A METAL INSULATED REBAR CAP WITH 2" MINIMUM DIAMETER, BERNTSON ITEM #QSD5200 OR APPROVED EQUAL. THE CAP SHALL BE STAMPED WITH THE PLS LICENSE NUMBER AND PUNCHED TO SHOW THE TRUE POINT.

STREET MONUMENT WITH FRAME AND COVER
CITY OF LEWISTON
STD. DWG 1-3

STREET MONUMENT DETAIL

NOT TO SCALE

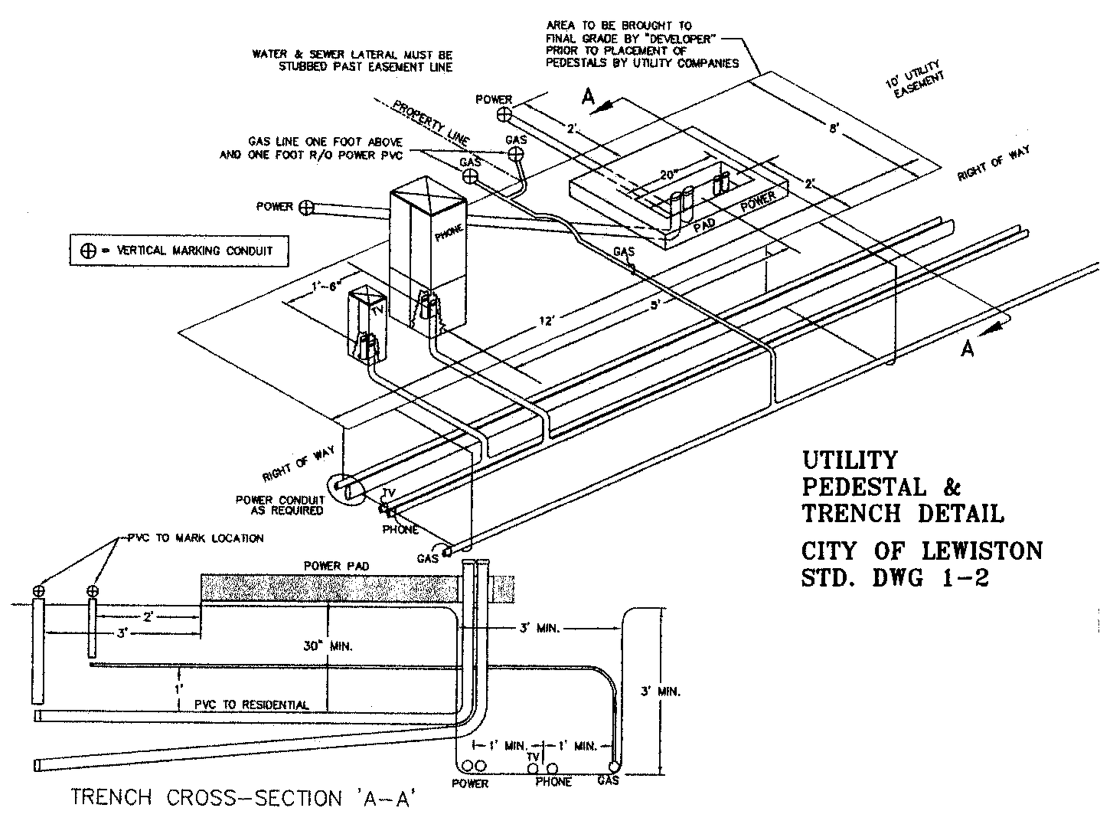

UTILITY PEDESTAL & TRENCH DETAIL
CITY OF LEWISTON
STD. DWG 1-2

UTILITY DETAIL

NOT TO SCALE

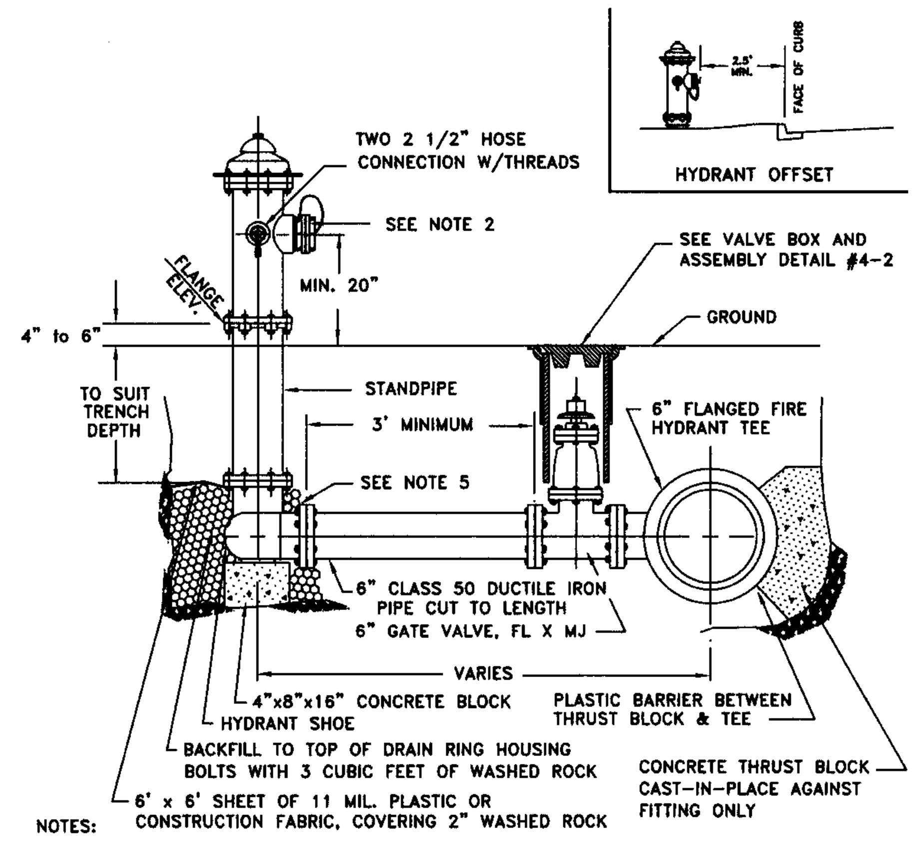

NOTES:
1. FIRE HYDRANT SHALL BE MUELLER SUPER CENTURION, WATEROUS PACER WITH 16" UPPER STANDPIPE OR EAST JORDAN IRON WORKS WATERMASTER.
2. HARRINGTON STORZ ADAPTER (4 1/2" NH x 5" STORZ) AND BLIND CAP (5" STORZ) W/ AIRCRAFT CABLE AT THE 4 1/2" PUMPER NOZZLE.
3. FIRE HYDRANT SHALL BE SPACED AT A MAX. OF 500 FEET IN RESIDENTIAL AREAS AND 300 FEET IN COMMERCIAL AREAS.
4. A MINIMUM 3 FOOT RADIUS OF UNOBSTRUCTED WORKING AREA SHALL BE PROVIDED AROUND ALL HYDRANTS.
5. GRIP PACKS OR ALL THREAD REQUIRED WITH THRUST BLOCK.

FIRE HYDRANT W/ SHUT-OFF VALVE
CITY OF LEWISTON
STD. DWG 4-12

FIRE HYDRANT INSTALLATION DETAIL

NOT TO SCALE

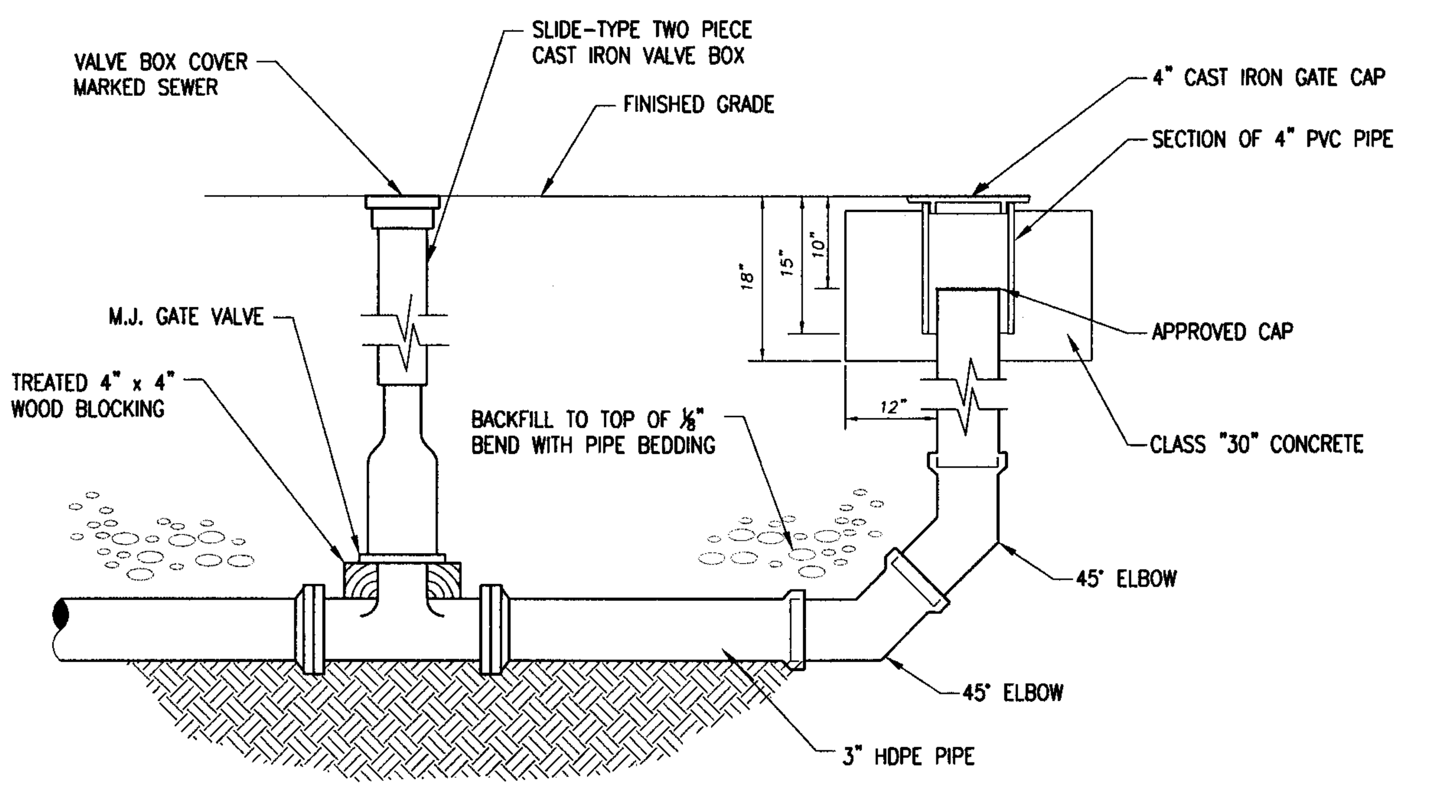

FLUSHING PORT DETAIL

NOT TO SCALE

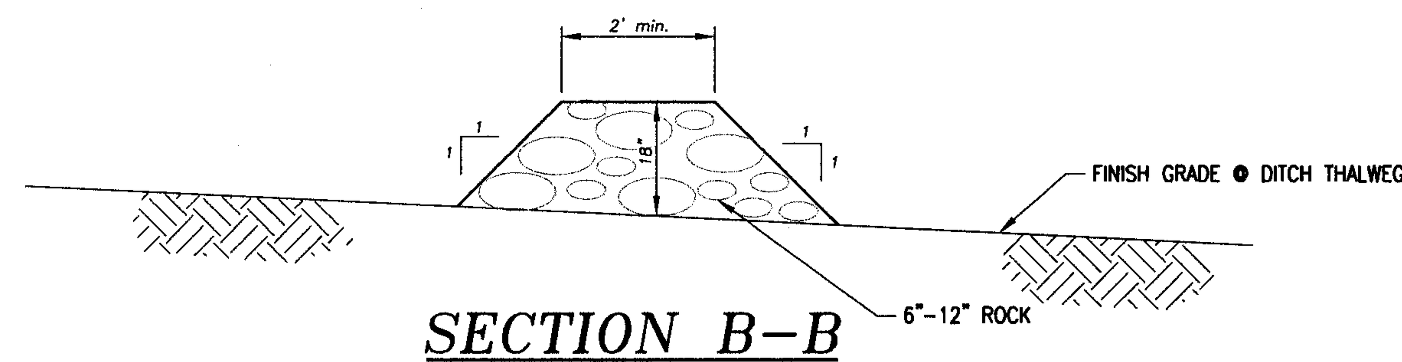

SECTION B-B

NOT TO SCALE

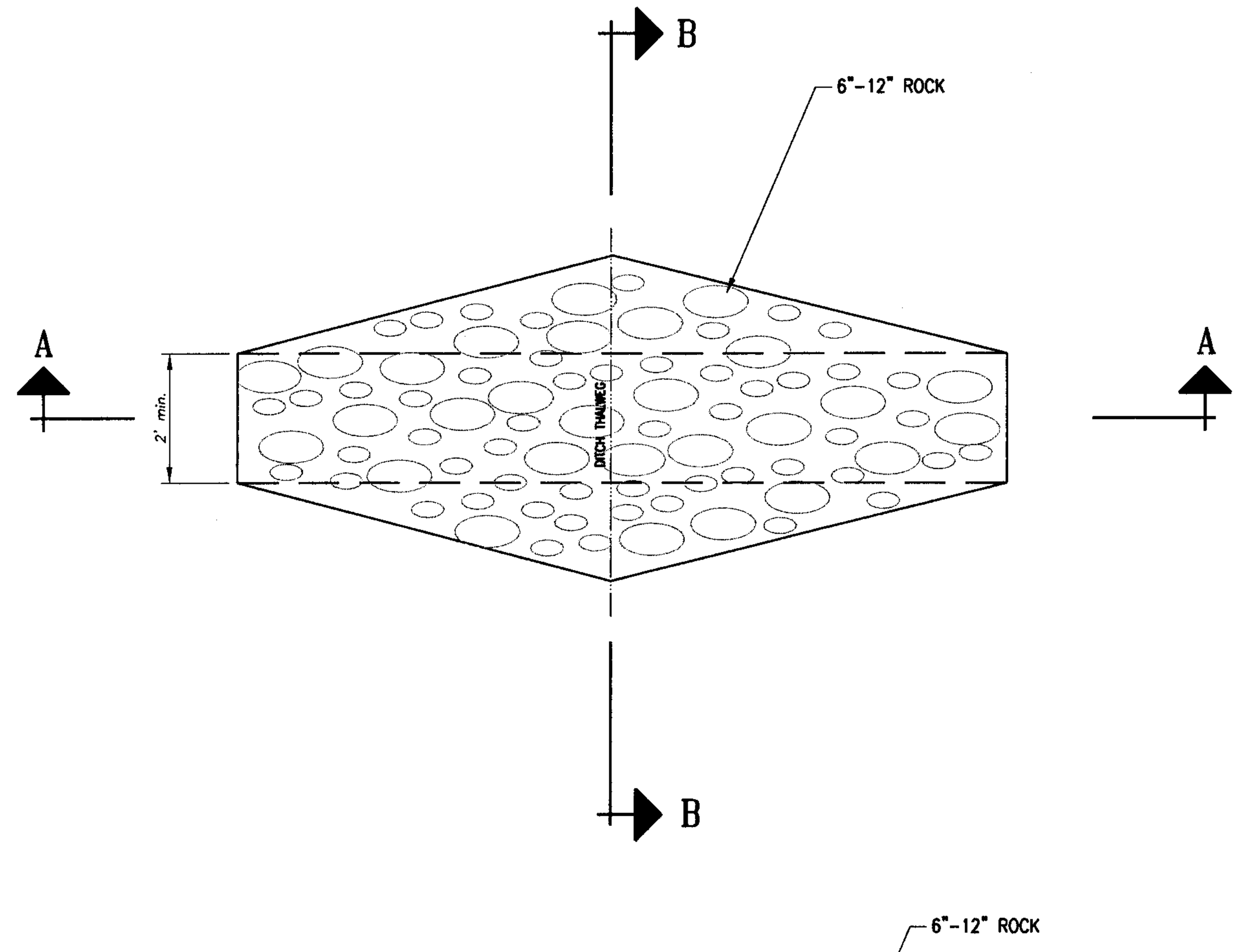

PLAN VIEW

NOT TO SCALE

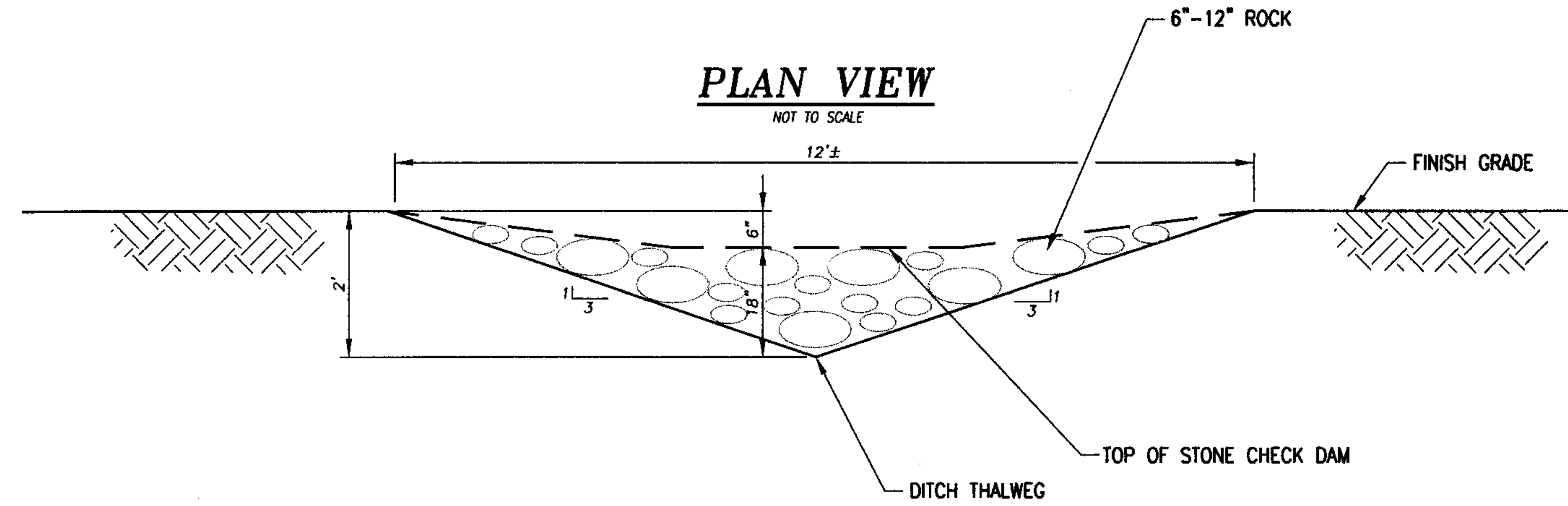

SECTION A-A

NOT TO SCALE

STONE CHECK DAM DETAIL

NOT TO SCALE

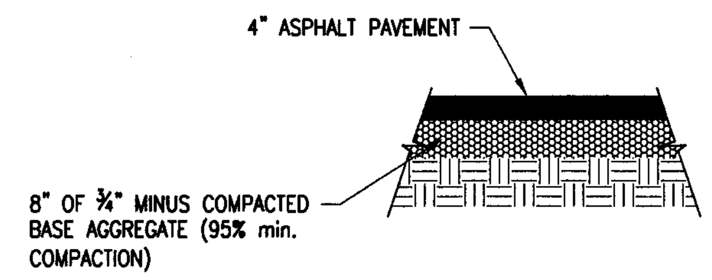

ASPHALT PATCHING DETAIL

NOT TO SCALE

RECORD DRAWING 06/21/12

No.	DATE	BY	REVISIONS

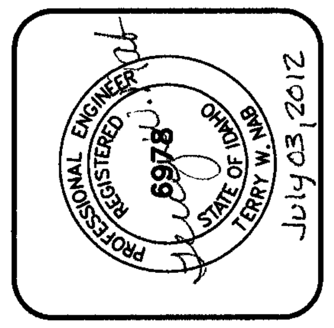

PROGRESSIVE ENGINEERING GROUP, INC
PLANNING ◬ DESIGN ⌖ CONSTRUCTION MANAGEMENT
1208 IDAHO STREET
LEWISTON, IDAHO 83501
PH (208) 746-5406 FAX (208) 746-9732

D 2 J, INC.

SOUTHPORT WATER MAIN EXTENSION
AIRPOINTE BUSINESS PARK
DETAILS
LEWISTON, IDAHO 83501

DRAWN BY: JAY	CHECKED BY: TWN
DESIGNED BY: TWN	
DATE: 02/28/11	
LAST REV:	
PROJECT NO.: 08-005	
SHEET 15 OF 17	