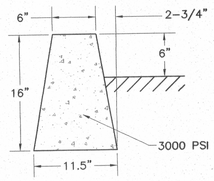

1 / C1.2 INTERIOR CURB DETAIL

NO SCALE

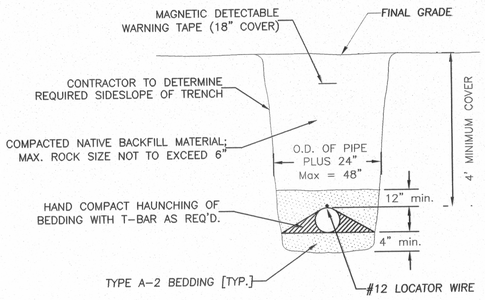

2 / C1.2 COMMON TRENCH EXCAVATION & BACKFILL DETAIL

NO SCALE

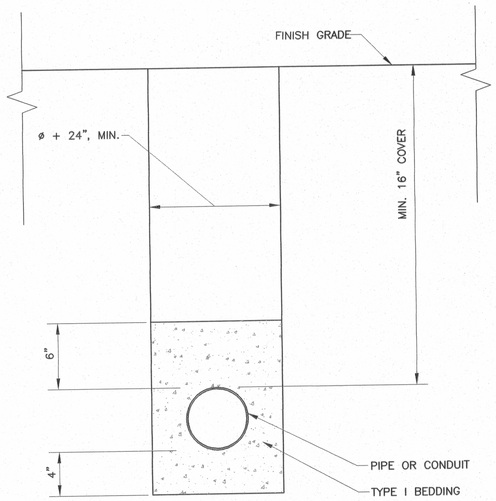

3 / C1.2 UTILITY TRENCH

NO SCALE

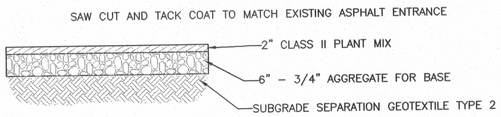

4 / C1.2 PAVEMENT SECTION DETAIL

NO SCALE

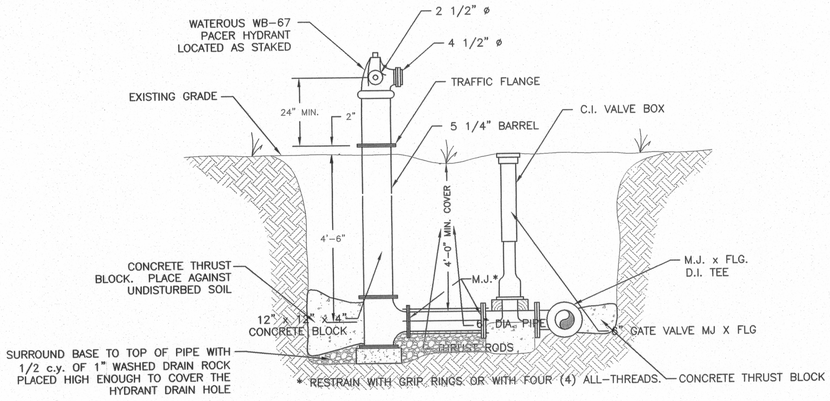

5 / C1.2 FIRE HYDRANT ASSEMBLY

NO SCALE

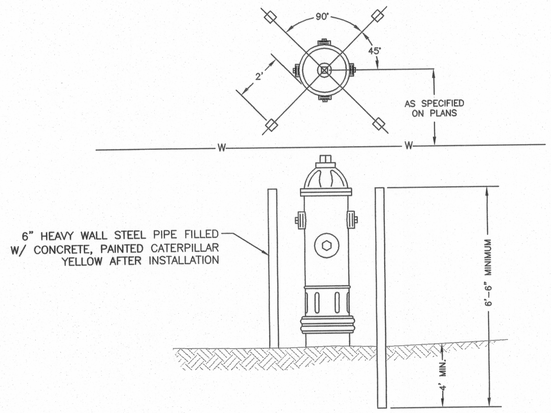

6 / C1.2 HYDRANT GUARD POSTS

NO SCALE

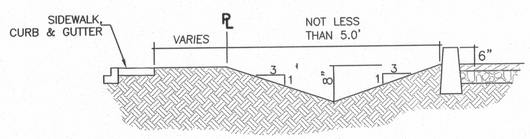

7 / C1.2 TYPICAL PERIMETER SECTION

NO SCALE

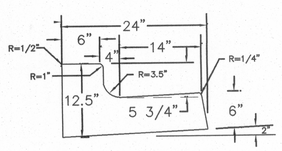

DRAWN PER LEWISTON CITY STANDARDS #ST-1B

8 / C1.2 TYPE 1 HIGHBACK CURB & GUTTER

NO SCALE

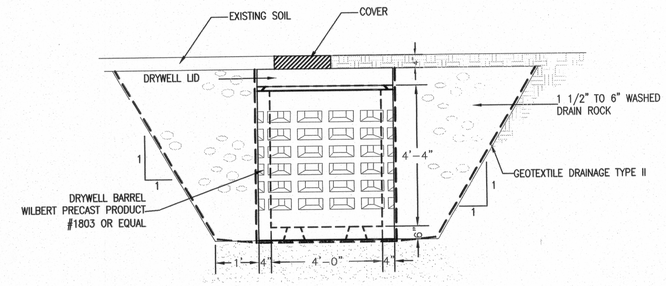

NOTES
1. 500-GALLON DRYWELL CAPACITY
2. WHEN PVC PIPE IS USED, A PVC ADAPTER SHALL BE INSTALLED.
3. PIPES SHALL BE GROUTED INTO DRYWELLS.

9 / C1.2 DRYWELL DETAIL

NO SCALE

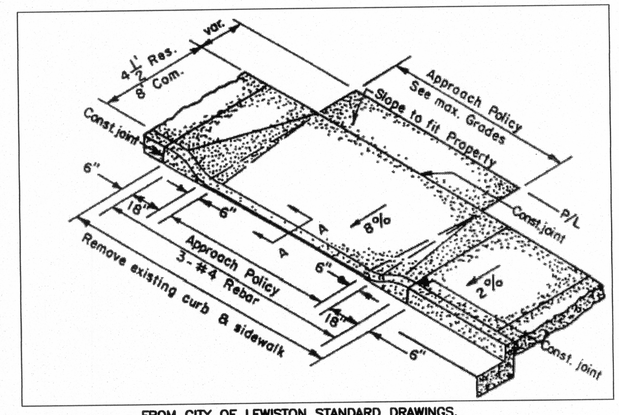

FROM CITY OF LEWISTON STANDARD DRAWINGS.
ALLEY AND DRIVEWAY ENTRANCE, ST-5, OPTION 2

10 / C1.2 STANDARD APPROACH

NO SCALE

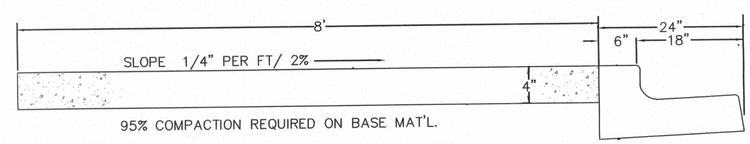

NOTE: SIDEWALK TO BE CONSTRUCTED AT THE LOCATION SHOWN ON PLAN AND PROFILE SHEETS. DRAWN PER LEWISTON CITY STANDARDS #ST-4

11 / C1.2 CONCRETE SIDEWALK W/ CURB & GUTTER

NO SCALE

Original Signed by Richard Lindsay
Date Original Signed: 3-3-06

PROFESSIONAL ENGINEER REGISTERED 8834 3-3-06 STATE OF IDAHO RICHARD L. INDSAY

The Original is a 24" x 36" document. Any other size is a reproduction.

Date Stamped:

Date	Revision	By
03-03-06	CITY OF LEWISTON COMMENTS 03-03-06	RLL
02-15-06	CITY OF LEWISTON COMMENTS 02-09-06	RLL
01-18-06	CITY OF LEWISTON COMMENTS	PLL

USKH
Engineering • Land Surveying
Planning • Architectural
101 Thain Road
Lewiston, ID 83501
(208) 746-2661
621 W. Mallon Ave, Ste 309
Spokane, WA 99201
(509) 328-5139
1920 Main Street, Ste 14
Ferndale, WA 98248
(360) 312-1815
5 North Colville
Walla Walla, WA 99362
(509) 522-4843
115 W. Hermiston Ave, Ste 140
Hermiston, OR 97838
(541) 564-4448

Project:

KENDALL MOTORS 1824/1826 MAIN ST SITE DEVELOPMENT

KENDALL AUTOMOTIVE GROUP
EUGENE, OREGON

Project Mgr.	RLL
Drawn	ERB
Drawn	
Checked	RLL
Date	01-18-06

Sheet Contents:
DETAILS

Sheet No.:
C1.2

USKH W.O. 8538

I:\8538\01 Kendall Main Street Site\Dwg\Sheets\8538\01 C1-1 and 2.DWG