AVIATION DREAMS/ OPPORTUNITIES DEVELOPMENT

CIVIL CONSTRUCTION PLANS

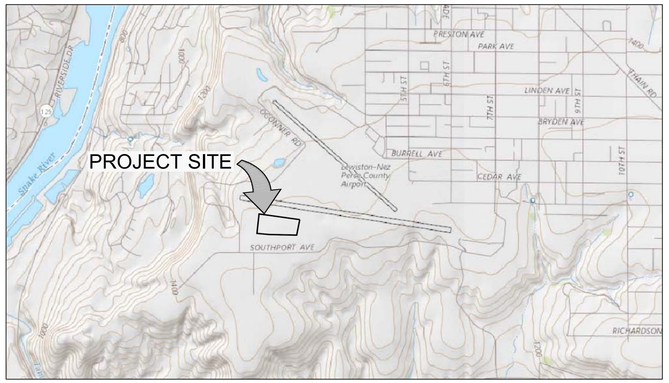

LEGEND

PROPOSED SAN. SEWER	EXISTING SAN. SEWER
PROPOSED STORM SEWER	EXISTING STORM SEWER
PROPOSED WATER LINE	EXISTING WATER LINE
PROPOSED FIRE PROTECTION	EXISTING FIRE PROTECTION
PROPOSED FENCE LINE	EXISTING OVERHEAD ELECTRICAL LINE
PROPOSED CATCH BASIN	EXISTING UNDERGROUND ELECTRICAL LINE
PROPOSED MANHOLE	EXISTING FENCE LINE
PROPOSED WATER METER	EXISTING CATCH BASIN
PROPOSED GATE VALVE	EXISTING MANHOLE
PROPOSED FIRE HYDRANT	EXISTING GATE VALVE
PROPOSED THRUST BLOCK	EXISTING FIRE HYDRANT
PROPOSED CONTOUR LINE	EXISTING THRUST BLOCK
PROPOSED SPOT ELEVATION	EXISTING WATER METER
PROPOSED CENTERLINE MONUMENT	EXISTING POWER POLE
PROPOSED CENTERLINE	EXISTING CONTOUR LINE
PROPOSED EASEMENT LINE	EXISTING SPOT ELEVATION
PROPERTY LINE	EXISTING UTILITY
PROJECT BOUNDARY	EXISTING PROPERTY LINE
SILT FENCE	EXISTING CENTERLINE MONUMENT

CONTACTS

OWNER

AVIATION DREAMS, LLC
16915 HATWAI BYPASS ROAD
LEWISTON, ID 83501

GEOTECHNICAL SERVICES

ALLWEST TESTING & ENGINEERING, LLC
2705 E. MAIN STREET
LEWISTON, IDAHO

UTILITY PROVIDERS

SANITARY SEWER	CITY OF LEWISTON	208-746-9689
WATER	CITY OF LEWISTON	208-746-8235
POWER	AVISTA (Colby Witters)	509-780-1475
TELECOM.	CENTURY LINK (Julio Mendez)	208-798-8380
CABLE T.V.	CABLEONE (Tom Donahue)	208-791-5032

PUBLIC IMPROVEMENT QUANTITIES

6.	Catch Basins	10 Each
7a.	18" HDPE Storm Drain	1090 L.F.
7b.	24" CMP Pipe/Slot Drain	660 L.F
7c.	24" CMP Pipe	140 L.F.
7d.	4' Dia Storm Sewer MH	9.5 V.F.
8.	8" PVC Sanitary Sewer	620 L.F.
9.	4' Dia. San. Sewer MH	20 V.F.
10.	8" C900 PVC Water Main	825 L.F.
11.	8" Gate Valves	5 Each
15.	Fire Hydrants	3 Each
16.	Water Services	26 Each

811 Know what's below. Call before you dig.

SHEET INDEX

C1.0	GENERAL NOTES & DETAILS	C6.1	TAXILANE 1 - PLAN & PROFILE
C2.0	EXISTING CONDITIONS/ DEMOLITION PLAN	C6.2	TAXILANE 2 - PLAN & PROFILE
C3.0	CONSTRUCTION EROSION & SEDIMENT CONTROL PLAN	C6.3	TAXILANE 3 - PLAN & PROFILE
C4.0	PROJECT OVERVIEW	C6.4	TAXILANE 4 - PLAN & PROFILE
C4.1	SITE DEVELOPMENT PLAN	C7.0	STORM SEWER LINE A - PLAN & PROFILE
C5.0	SITE GRADING PLAN	C8.0	STANDARD DRAWINGS
C5.1	SITE X-SECTIONS	C8.1	STANDARD DRAWINGS
C5.2	SITE X-SECTIONS	C8.2	STANDARD DRAWINGS
C5.3	SITE X-SECTIONS	C8.3	STANDARD DRAWINGS

REV NO	DATE	REVISION DESCRIPTION	CHECKED	APPD.
A	03-01-18	Revised as per City Review Comments dated January 18, 2018		

REGISTERED PROFESSIONAL ENGINEER - LAND SURVEYOR - OFFICIAL SEAL OF JOHN STEVEN HAMMOND #21102 STATE OF IDAHO

SCALE	SHEET SIZE D	CHECKED BY JSH	
DRAWN BY MEE		JOB # 1712	
DATE 12-21-17		SHEET C0	
DRAWING # 1712-C0			

AVIATION DREAMS/ OPPORTUNITIES DEVELOPMENT
LEWISTON - NEZ PERCE COUNTY REGIONAL AIRPORT
LEWISTON, IDAHO

03-01-2018 CONSTRUCTION SET

HEDCO
HAMMOND ENGINEERING & DEVELOPMENT CO.
528 BRYDEN AVENUE LEWISTON, IDAHO 83501
(208) 798-5422

SHEET **C0**

CITY INSPECTION CHECKLIST

NOTE: The City of Lewiston reserves the right for 3rd party verification, inspection, and/or testing prior to infrastructure acceptance. Payment for the services of 3rd party will be the responsibility of the City of Lewiston unless items verified, inspected, and/or tested indicate non-conformance, will be the responsibility of developer/ contractor.

ITEM	MATERIAL	TEST / STANDARD	ACCEPTANCE	TEST FREQUENCY	INSPECTOR/CO.
1. ALL UTILITY TRENCHES & STRUCTURES					
TRENCH SUBGRADE	Native (6" to 8" Lifts Max.)	Moisture Density Relationship of Soils (AASHTO T 180) In-Place Density and Moisture Content (AASHTO 310 Method B)	90% Max. Dry Density	One in-place density test every lift per 100 linear feet. If project is less than 100 linear feet, one in-place density test per day OR per lift [whichever test frequency is more restrictive].	ALLWEST
PIPE BEDDING	3/4" minus Crushed Aggregate (6" to 8" Max. Lift) (Current ITD Spec 703.04) OR 5/8" minus Crushed Aggregate (6" to 8" Max. Lift) (Current WDOT/M41-10 Spec 9-03.9)	Moisture Density Relationship of Soils (AASHTO T 180) In-Place Density and Moisture Content (AASHTO 310 Method B)	95% Max. Dry Density	One in-place density test every lift per 100 linear feet. If project is less than 100 linear feet, one in-place density test per day OR per lift [whichever test frequency is more restrictive]. Test top 6" of 12" cover.	ALLWEST
1st FOOT [12"] OF FILL OVER PIPE	3/4" minus Crushed Aggregate (6" to 8" Max. Lift) (Current ITD Spec 703.04) OR 5/8" minus Crushed Aggregate (6" to 8" Max. Lift) (Current WDOT/M41-10 Spec 9-03.9)	Moisture Density Relationship of Soils (AASHTO T 180) In-Place Density and Moisture Content (AASHTO 310 Method B)	95% Max. Dry Density	One in-place density test every lift per 100 linear feet. If project is less than 100 linear feet, one in-place density test per day OR per lift [whichever test frequency is more restrictive].	ALLWEST
TRENCH BACKFILL UNDER PROPOSED ROAD & SIDEWALK	3/4" minus Crushed Aggregate (6" to 8" Max. Lift) (Current ITD Spec 703.04) OR 5/8" minus Crushed Aggregate (6" to 8" Max. Lift) (Current WDOT/M41-10 Spec 9-03.9)	Moisture Density Relationship of Soils (AASHTO T 180) In-Place Density and Moisture Content (AASHTO 310 Method B)	95% Max. Dry Density	One in-place density test every lift per 100 linear feet. If project is less than 100 linear feet, one in-place density test per day OR per lift [whichever test frequency is more restrictive].	ALLWEST
STRUCTURAL FILLS	As Spec'd by Engineer	As Spec'd by Engineer		As Spec'd by Engineer	ALLWEST
2. STORM DRAIN MAINS					
GASKETED PE Storm Sewer Pipe	Polyethylene, ADS N-12 or Equal		Certified & Visual by City		Certified & Visual by City
ALIGNMENT AND GRADE	N/A	Per Manufacturer's Instructions		Per Plan	
JOINTS (Deflection/Proper Pipe Embedment)	N/A	Per Manufacturer's Instructions		Each Joint	
PRESSURE TEST	N/A	4 PSI for 15 Minutes, 1/2 PSI Drop	If required by City Engineer	Between Access Holes	
MANHOLES	Concrete	City Standard		N/A	Certified & Visual by City
VIDEO INSPECTION	N/A		Public Works Policy No 2012-2		
3. WATER MAINS					
DUCTILE IRON or PVC WATER MAIN	AWWA C-151, C-900, C-905 (Class as Req'd)		Certified & Visual by City		City
ALIGNMENT AND GRADE	N/A	AWWA C-600, AWWA C-605		Per Plan	
JOINTS (Deflection/Proper Pipe Embedment)	N/A	AWWA C-600, AWWA C-605		Each Joint	
THRUST BLOCKS	Concrete, 2500 PSI Mix	Per Approved Plans/or City Std Dwg # 4-4		Each Joint	
HYDROSTATIC PRESSURE	N/A	2 Hrs, NTE Allowable Leakage Per AWWA C-600, AWWA C 605		150% Working Pressure OR 1½ times the Working Pressure in the Water System	City
CHLORINATION/BACTERIA	N/A	AWWA C-651		Bacterial Testing: two negative testing samples 24 hours apart	City
4. WASTEWATER MAINS					
PVC WASTEWATER MAIN	PVC, SDR 35	ASTM 3034		N/A	City
ALIGNMENT AND GRADE	N/A	N/A		Per Plan	City
JOINTS (Deflection/Proper Pipe Embedment)	N/A	Per Manufacturer's Instructions		Each Joint	City
MANHOLES	Concrete	Hydrostatic Test		Each Joint	City
PRESSURE TEST	N/A	4 PSI for 15 Minutes, 1/2 PSI Drop		Between Access Holes	City
VIDEO INSPECTION	N/A	No Perforations, Dents or Dimples, No Bellies > 0.02'	Public Works Policy No 2012-2	Between Access Holes	CONTRACTOR
Sections 5 thru 11 on Page 2 of 2					
Date Last: Revised December 2017					

NOTE: The City of Lewiston reserves the right for 3rd party verification, inspection, and/or testing prior to infrastructure acceptance. Payment for the services of 3rd party will be the responsibility of the City of Lewiston unless items verified, inspected, and/or tested indicate non-conformance, will be the responsibility of developer/ contractor.

ITEM	MATERIAL	TEST / STANDARD	ACCEPTANCE	TEST FREQUENCY	INSPECTOR/CO.
5. CONCRETE CURB, GUTTER & SIDEWALK					
CONCRETE	CLASS 35B - Approved Mix Design Required with Min Cement Content of 560 Lb/CY, Max Water/ Cement Ratio of .44, a WRA, and an AEA	AASHTO T-22 Compressive Strength of Concrete AASHTO T-23 Making Test Specimens AASHTO T-119 Slump of Hydraulic Cement Concrete AASHTO T-152 Air Content of Freshly Mixed Concrete AASHTO T-309 Temperature of Freshly Mixed Concrete WAQTC TM-2 Sampling Freshly Mixed Concrete	Min. 28 day Compressive Strength = 3000 psi; Water/Cement Ratio shall be 0.5 lb/lb Max. Slump = 5 inches Air Content Percent = 6.5% ± 1.5 Temperature = 50°F - 80°F	1 of Each Test Minimum per Day, or 1 of Each Test per 50 CY	ALLWEST
CRUSHED AGGREGATE BASE COURSE	3/4" minus Crushed Aggregate (4" Max. Lift) (Current ITD Spec 703.04) OR 5/8" minus Crushed Aggregate (4" Max. Lift) (Current WDOT/M41-10 Spec 9-03.9)	Moisture Density Relationship of Soils (AASHTO T 180) In-Place Density and Moisture Content (AASHTO 310 Method B)	95% Max. Dry Density	1 Tests Per 500 LF-Min 2 Tests	ALLWEST
ALIGNMENT AND GRADE	N/A	Visual	± 0.02' from Design Grade/Alignment	Per 10' Section	City Approval
JOINTS/FLATNESS/STRAIGHTNESS	N/A	Visual	± 0.02'/10' Segment	Per 10' Section	
FINISH	N/A	Visual	Floated, Uniform, Light Broom Finish	Entire Surface Area	
6. ASPHALTIC CONCRETE PAVING					
SUPERPAVE HOT MIX ASPHALT	ITD 405 Superpave Class SP3 and SP5 (2017 ITD Spec 405 and 703.05) Note: Contractor shall provide a pre-pave meeting to discuss methods and production operations for new roadway construction or projects over 200 tons. The City of Lewiston reserves the right to request a pre-pave meeting for projects with 200 tons or less.	**Class SP2:** AASHTO T-308, Asphalt Content AASHTO T-27 & T-11, Sieve Analysis WAQTC TM-8, In-Place Density of Bituminous Mixes AASHTO T-209, Theoretical Maximum Density (RICE) **Class SP3 and SP5:** AASHTO T-308, Asphalt Content AASHTO T-27 & T-11, Sieve Analysis AASHTO T-166 Method A, Air Voids, and Voids in Mineral Aggregates (VMA) WAQTC TM-8, In-Place Density of Bituminous Mixes with Correlated Nuclear Gauge or, AAHSTO T-166, Density of Bituminous Mixes by Cores AASHTO T-209, Theoretical Maximum Density (RICE) Density Note: When a non-correlated gauge is used to determine in-place density during production, cores will be taken for final density and thickness determination. When a correlated gauge is used for production testing, cores will be taken for thickness determination only. **Core quantities and locations to be determined by the City of Lewiston.**	**ITD Section 405.03** Asphalt Content - CJMF Value +/- 0.3% Sieve Analysis - Table 405.03-5 Air Voids - 4.0 +/- 1.0% Voids in Mineral Aggregates, at N design 703.05 Minimum Value 0.05b **All Projects Regardless of Tonnage** In-Place Density - 92-95% of Maximum Theoretical (When acceptance will be from correlated gauge, contractor must submit documentation showing gauge correlation to proposed bituminous mixture used.)	**Project 200 tons or less** - Minimum of 1 test (asphalt content, and gradation) per project. A minimum of 2 cores will be taken to determine final thickness and/ or density. **Projects 200 tons or more** - Minimum of 1 test (asphalt content, gradation, voids, and VMA) per 750 tons or, one per day. A minimum of 5 cores will be taken to determine final thickness and/or density. Random sampling locations determined by the City of Lewiston. The City of Lewiston reserves the right for 3rd party verification, inspections, and/or testing prior to infrastructure acceptance.	ALLWEST
CRUSHED AGGREGATE BASE COURSE	Same test requirement as under **5. Concrete Curb, Gutter & Sidewalk**				ALLWEST
7. EROSION & SEDIMENT CONTROLS	Per Approved Plan	Per Plan and Manufacturers' Instructions		1/Wk or After Every Rainfall	CONTRACTOR
8. TRAFFIC CONTROL	Per Approved Plan	Current Adopted MUTCD/ATSSA		Continuous	CONTRACTOR
9. PRIVATE STORMWATER SYSTEM	Per Approved Plan	City Resolution #80-100	Certified & Visual by City		Certified & Visual by City - Underground infrastructure elements must be approved by City prior to backfill.
10. RECORD DRAWINGS	AutoCAD Elect File, Bond Paper, 22" x 34" Min Size	City Checklist		Before Public Improvements Accepted	HEDCO, Inc.
Date Last: Revised December 2017					

\\cityhall.org\dept\PublicWorks\DEVELOPMENT\COMMERCIAL\Current Checklists\Checklist for Cover Sheet\2018 Inspection Checklist - Page 2 of 2

REV	DATE	REVISION DESCRIPTION	CHECKED	APPD.
A	03-01-18	Revised as per City Review Comments dated January 19, 2018		

REGISTERED PROFESSIONAL ENGINEER - LAND SURVEYOR - GROUND WATER PROFESSIONAL
STATE OF IDAHO
21.02
JOHN SHAMMO
12-21-17

SCALE	SHEET SIZE D		
DRAWN BY MEE	CHECKED BY JSH		
DATE 12-21-17	JOB # 1712		
SHEET C0.1			
DRAWING # 1712-C0.1			

AVIATION DREAMS/ OPPORTUNITIES DEVELOPMENT
LEWISTON - NEZ PERCE COUNTY REGIONAL AIRPORT
LEWISTON, IDAHO

HEDCO

HAMMOND ENGINEERING & DEVELOPMENT CO.
528 BRYDEN AVENUE LEWISTON, IDAHO 83501
(208) 798-5422

SHEET **C0.1**

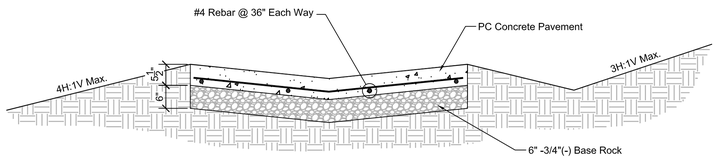

PC CONCRETE PAVEMENT

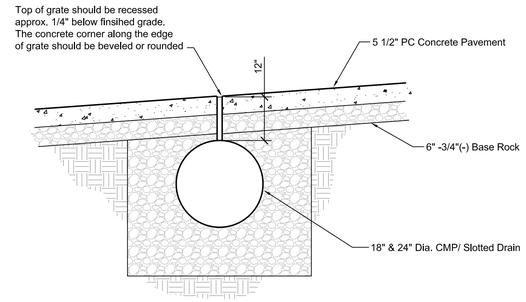

CMP/ SLOTTED DRAIN

NOTES:

1. ALL EARTHWORK SHALL BE COMPACTED TO 95 % OF AASHTO T-99 PROCTOR VALUE.
2. ALL POTABLE WATER LINES RUNNING FROM MAIN TO METERS WILL BE 1" AND METERS WILL BE 3/4" TYP.
3. SANITARY SEWERS SHALL HAVE 3.0' MIN. COVER & SERVICE LATERALS SHALL HAVE 2.0 % MIN. GRADE. STORM DRAINS SHALL HAVE 2.0' MIN. COVER
6. ALL WORK DONE WITHIN CITY RIGHT OF WAY TO BE DONE IN ACCORDANCE WITH CITY STANDARDS.
7. WATER MAIN PIPING, VALVES, FIRE HYDRANTS AND WATER METERS SHALL BE FURNISHED AND INSTALLED IN ACCORDANCE WITH CITY OF LEWISTON STANDARDS.
8. SANITARY SEWER PIPING AND MANHOLES SHALL BE FURNISHED AND INSTALLED IN ACCORDANCE WITH CITY OF LEWISTON STANDARDS.
9. CITY OF LEWISTON IS RESPONSIBLE FOR SANITARY SEWER INSPECTION.
10. ALL AVISTA CONDUITS WILL BE SCHEDULE 40 GRAY ELECTRICAL CONDUIT (LARGE SWEEPS, LONG COUPLERS)
11. A RIGHT-OF-WAY PERMIT SHALL BE OBTAINED THROUGH THE PUBLIC WORKS DEPARTMENT PRIOR TO ANY WORK WITHIN PUBLIC RIGHT-OF-WAY.
12. THE CONTRACTOR SHALL BE RESPONSIBLE FOR PROTECTING ALL UNDERGROUND UTILITIES AT ALL TIMES DURING CONSTRUCTION. THE CONTRACTOR SHALL BE RESPONSIBLE FOR REPAIRING ALL DAMAGES AT NO ADDITIONAL COST TO THE OWNER. THE LOCATIONS OF UNDERGROUND UTILITIES SHOWN ON THE PROJECT DRAWINGS ARE APPROXIMATE AND BASED ON EXISTING RECORDS AND FIELD SURVEYS. THE NUMBER AND LOCATIONS OF ALL UNDERGROUND UTILITIES SHOWN ARE FOR INFORMATIONAL PURPOSES ONLY. FOR YOUR SAFETY, STATE LAW REQUIRES THAT THE CONTRACTOR SHALL CALL 811 "CALL BEFORE YOU DIG" FOR UTILITY FIELD LOCATIONS PRIOR TO COMMENCING EXCAVATION ON SITE. THE CONTRACTOR SHALL COORDINATE ALL WORK WITH THE RELEVANT UTILITY COMPANIES
13. SITE DISTANCES FOR ABUTTING PROPERTIES, DRIVEWAYS AND INTERSECTIONS SHALL BE MAINTAINED.
14. ALL CONSTRUCTION NOT SPECIFICALLY MENTIONED OR SHOWN SHALL CONFORM TO CITY ORDINANCES AND STANDARD DRAWINGS & TECHNICAL SPECS.
15. A SWPPP & NOI IS REQUIRED FOR THIS PROJECT. THE CONTRACTOR SHALL REFERENCE THE STORMWATER POLLUTION PREVENTION MANUAL (SWPPP) FOR ALL EROSION CONTROL PROCEDURES ON SITE.
16. CITY OF LEWISTON IS RESPONSIBLE FOR WATERMAIN INSPECTION.

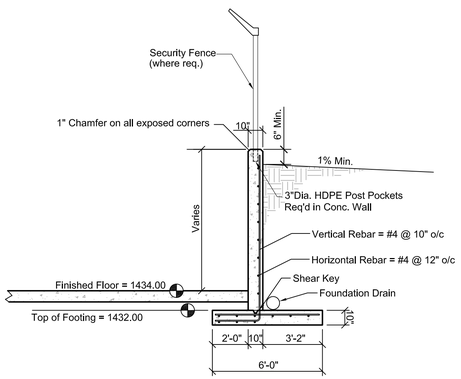

HANGER BLDG. CONC. RETAINING WALL

DETAIL 1A
NO SCALE 1712-C4.1

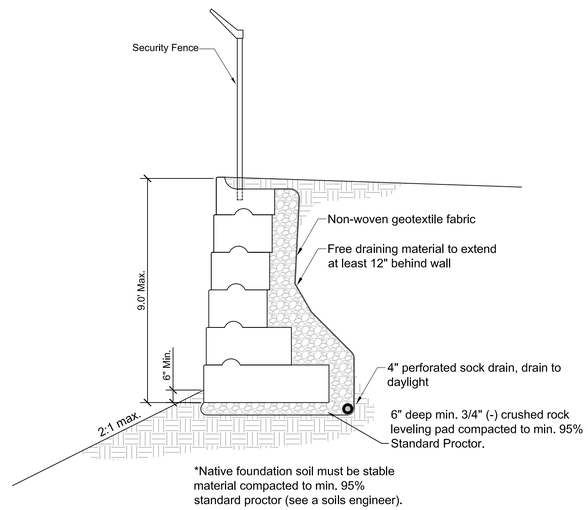

REDI-ROCK RETAINING WALL

DETAIL 1B
NO SCALE 1712-C4.1

FRANCHISE UTILITIES TRENCH DETAIL

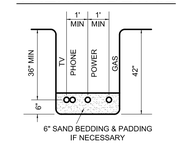

LINE CROSSINGS

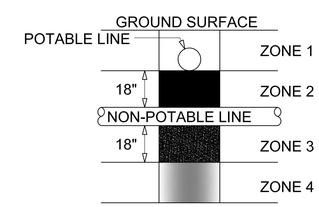

ZONE 1:
A) Potable Water and Non-potable Mains and Service Lines must be separated by at least 18 inches and

B) One full, uncut length of Non-Potable pipe must be centered so that the joints are as far as possible from the crossing.

ZONE 2: Potable line<18" over the top of Non-Potable line (Main and Services).

A) One full, uncut length of Non-Potable Water pipe must be centered on the crossing so that the joints are as far as possible from the Non-Potable line and

either B)

Non-Potable line must be constructed to Potable water pipe standards and pressure tested for water tightness for a horizontal distance of 10 feet on both sides of crossing,

or C)

Non-Potable or potable line must be cased in a larger diameter carrier pipe for a horizontal distance of 10 feet on both sides of the crossing, with no joints.

ZONE 3: Same requirements as Zone 2 except the Non-Potable line must also be supported above the crossing to prevent settling.

ZONE 4: Same requirements as Zone 1 except the Non-potable line must also be supported above the crossing to prevent settling.

Sewage mains shall have at least eighteen inches of clearance from Potable Water mains and Zones 2 and 3 placements are prohibited. Separation requirements also apply to Potable and Non-Potable service lines controlled by the system owner and extending to the property line, service meter, or cleanout. Refer to IDAPA 58.1.08.542.07: Idaho Rules for Public Drinking Water Systems and IDAPA 58.01.16.430.0 Idaho Wastewater Rules.

LINE SEPARATIONS

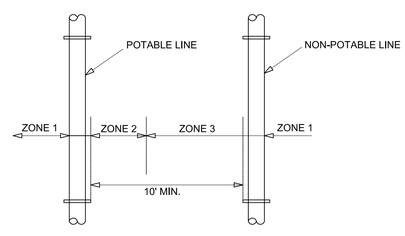

ZONE 1: (MORE THAN 10 FEET APART)

ZONE 2: (FROM 6 TO 10 FEET APART)
* Potable and Non-Potable mains separated by at least 6 feet at outside walls and
* Potable main higher in elevation than Non-Potable mains and
* Non-Potable mains constructed to with Potable water class pipe and pressure tested for water-tightness.

Zone 3 : (CLOSER THAT 6 FEET APART)
* For Mains and Services, Design Engineer to submit data to Department for review and approval that this intuallation will protect public health and environment and non-potable line constructed with potable water class pipe.

REV NO	DATE	REVISION DESCRIPTION	CHECKED	APPD.

REGISTERED PROFESSIONAL ENGINEER, LAND SURVEYOR, OFFICIAL SEAL OF STATE OF IDAHO, #21102, 12/21/17

SCALE	SHEET SIZE D	CHECKED BY JSH
DRAWN BY MEE	JOB # 1712	
DATE 12-21-17	SHEET C1	
DRAWING # 1712-C1		

AVIATION DREAMS/ OPPORTUNITIES DEVELOPMENT
LEWISTON - NEZ PERCE COUNTY REGIONAL AIRPORT
GENERAL NOTES AND DETAILS
LEWISTON, IDAHO

HEDCO
HAMMOND ENGINEERING & DEVELOPMENT CO.
528 BRYDEN AVENUE LEWISTON, IDAHO 83501
(208) 798-5422

SHEET **C1**

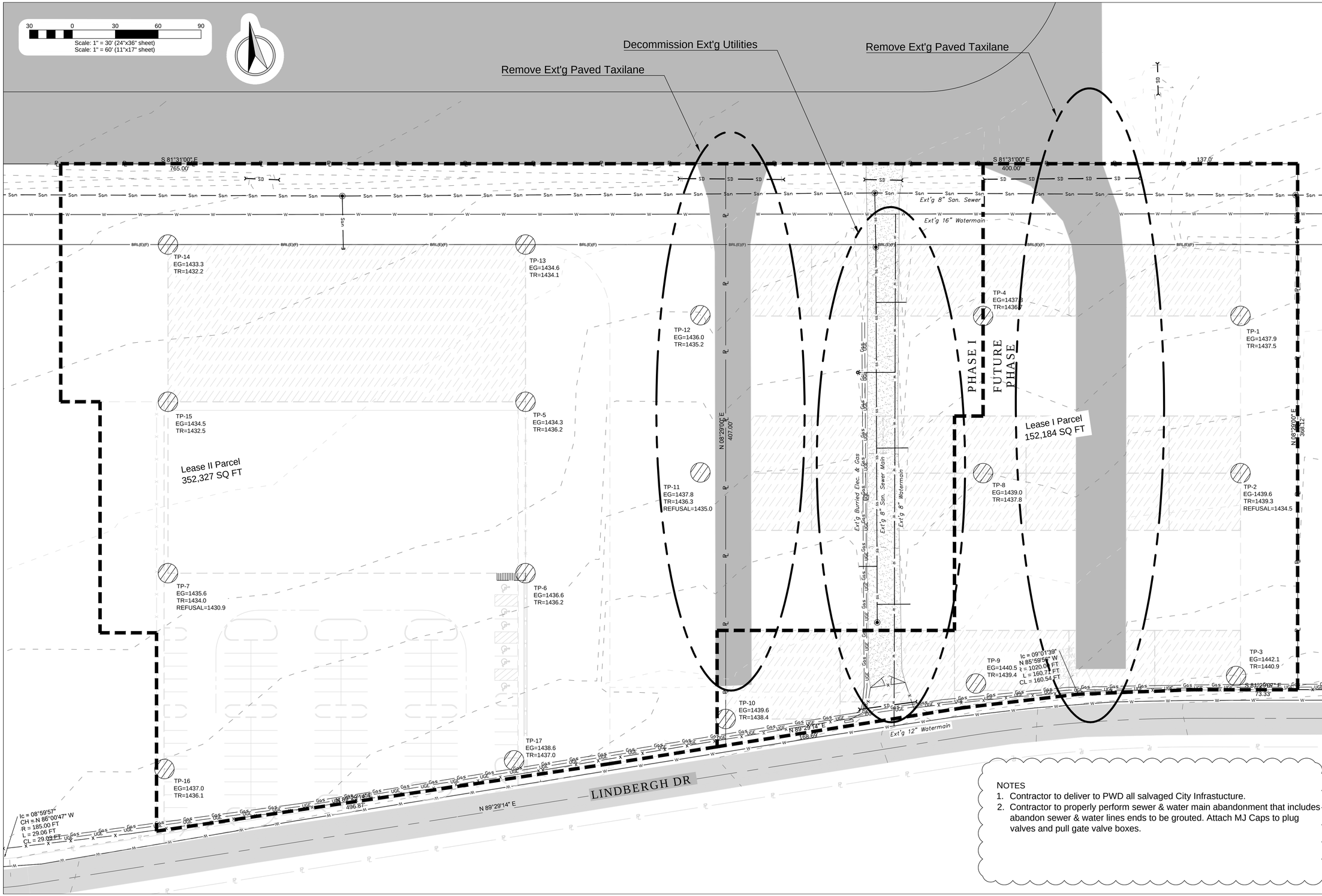

NOTES
1. Contractor to deliver to PWD all salvaged City Infrastucture.
2. Contractor to properly perform sewer & water main abandonment that includes abandon sewer & water lines ends to be grouted. Attach MJ Caps to plug valves and pull gate valve boxes.

REV'D	DATE	REVISION DESCRIPTION	CHECKED	APPD.
A	01-25-18	Revised as per City Review Comments dated January 18, 2018		

REGISTERED PROFESSIONAL ENGINEER, LAND SURVEYOR, AND PROJECT MANAGER OF IDAHO
#21 02
JOSEPH S. HAMMOND
1-25-18

SCALE	1"=30'
SHEET SIZE	D
DRAWN BY	MEE
CHECKED BY	JSH
DATE	12-21-17
JOB #	1712
SHEET	C2.0
DRAWING #	1712-C2.0

AVIATION DREAMS/ OPPORTUNITIES DEVELOPMENT
LEWISTON - NEZ PERCE COUNTY REGIONAL AIRPORT
EXISTING CONDITIONS/ DEMOLITION PLAN
LEWISTON, IDAHO

HEDCO
HAMMOND ENGINEERING & DEVELOPMENT CO.
528 BRYDEN AVENUE LEWISTON, IDAHO 83501
(208) 798-5422

SHEET
C2.0

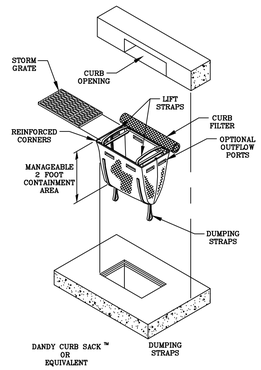

CATCH BASIN SILT BAG

NTS

*Install silt bags in existing and new catch basins. Leave in place until all construction activities have ceased.

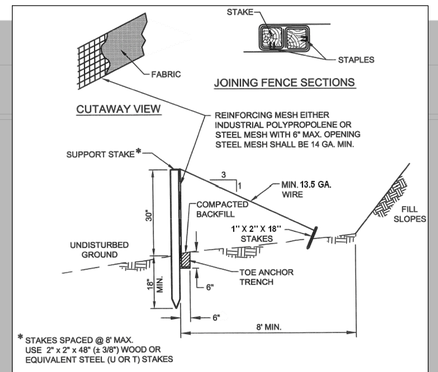

SILT FENCE

NTS

NOTES

1. SEDIMENTATION AND EROSION CONTROL MEASURES MUST BE INSPECTED BY QUALIFIED PERSONNEL. INSPECTIONS SHALL BE CONDUCTED AT LEAST ONCE EVERY 14-CALENDAR DAYS AND WITHIN 24 HOURS AFTER A STORM EVENT OF 0.5 INCHES OR GREATER. AN INSPECTION REPORT SHALL BE COMPLETED FOR EACH INSPECTION. ALL INSPECTIONS AND THE INSPECTION REPORT SHALL BE IN ACCORDANCE WITH THE STORM WATER POLLUTION PREVENTION PLAN.
2. EROSION AND DUST CONTROL MEASURES MUST BE USED DURING CONSTRUCTION TO REDUCE OR ELIMINATE BLOWING DUST, EXCESSIVE RUNOFF AND SOIL EROSION ACROSS PROPERTY LINES AND INTO STREETS AND RIGHT-OF-WAY, AND TO ELIMINATE TRACKING OF SOIL AND MUD ONTO STREETS FROM CONSTRUCTION EQUIPMENT AND VEHICLES. THE CONTRACTOR IS RESPONSIBLE FOR STREET CLEANUP AT THE END OF EACH SHIFT.
3. SEE PROJECT SPECIFICATIONS FOR ADDITIONAL GUIDELINES
4. A SWPPP & NOI IS REQUIRED FOR THIS PROJECT. THE CONTRACTOR SHALL REFERENCE THE STORMWATER POLLUTION PREVENTION MANUAL (SWPPP) FOR ALL EROSION CONTROL PROCEDURES ON SITE.

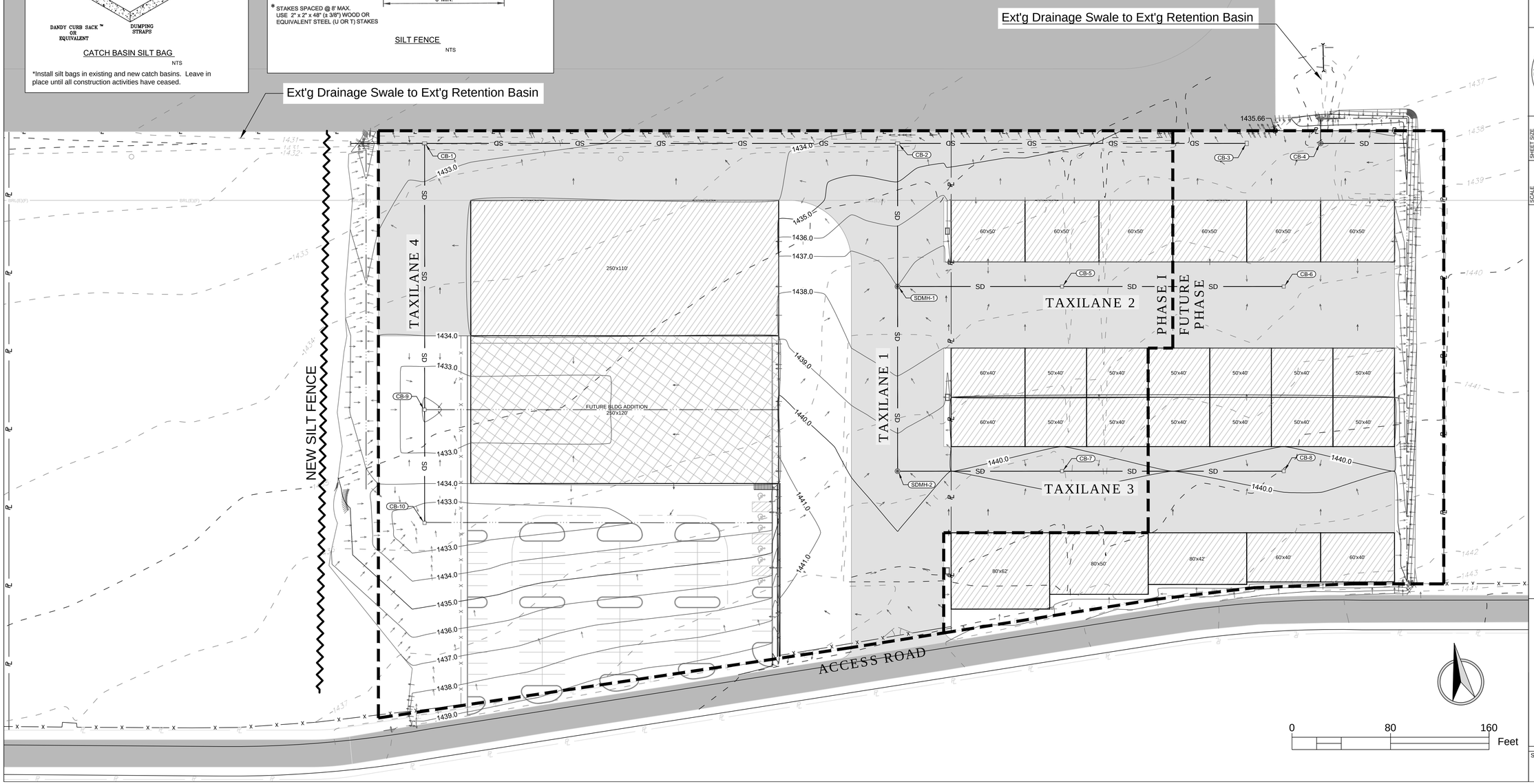

REV NO.	DATE	DESCRIPTION	CHECKED	APPD.
		REVISION		

ENGINEER - LAND SURVEYOR - DEVELOPER
REGISTERED PROFESSIONAL
#21102
STATE OF IDAHO
JOHN S. HAMMOND
12/20/17

SCALE	1"=30'
SHEET SIZE	D
DRAWN BY	MEE
CHECKED BY	JSH
DATE	12-20-17
JOB #	1712
SHEET	C3.0
DRAWING #	1712-C3.0

LEWISTON - NEZ PERCE COUNTY REGIONAL AIRPORT
LWNP AIRPORT SOUTHSIDE DEVELOPMENT
CONSTRUCTION EROSION AND SEDIMENT CONTROL PLAN
LEWISTON, IDAHO

HEDCO

HAMMOND ENGINEERING & DEVELOPMENT CO.
528 BRYDEN AVENUE, LEWISTON, IDAHO 83501
(208) 798-5422

SHEET

C3.0

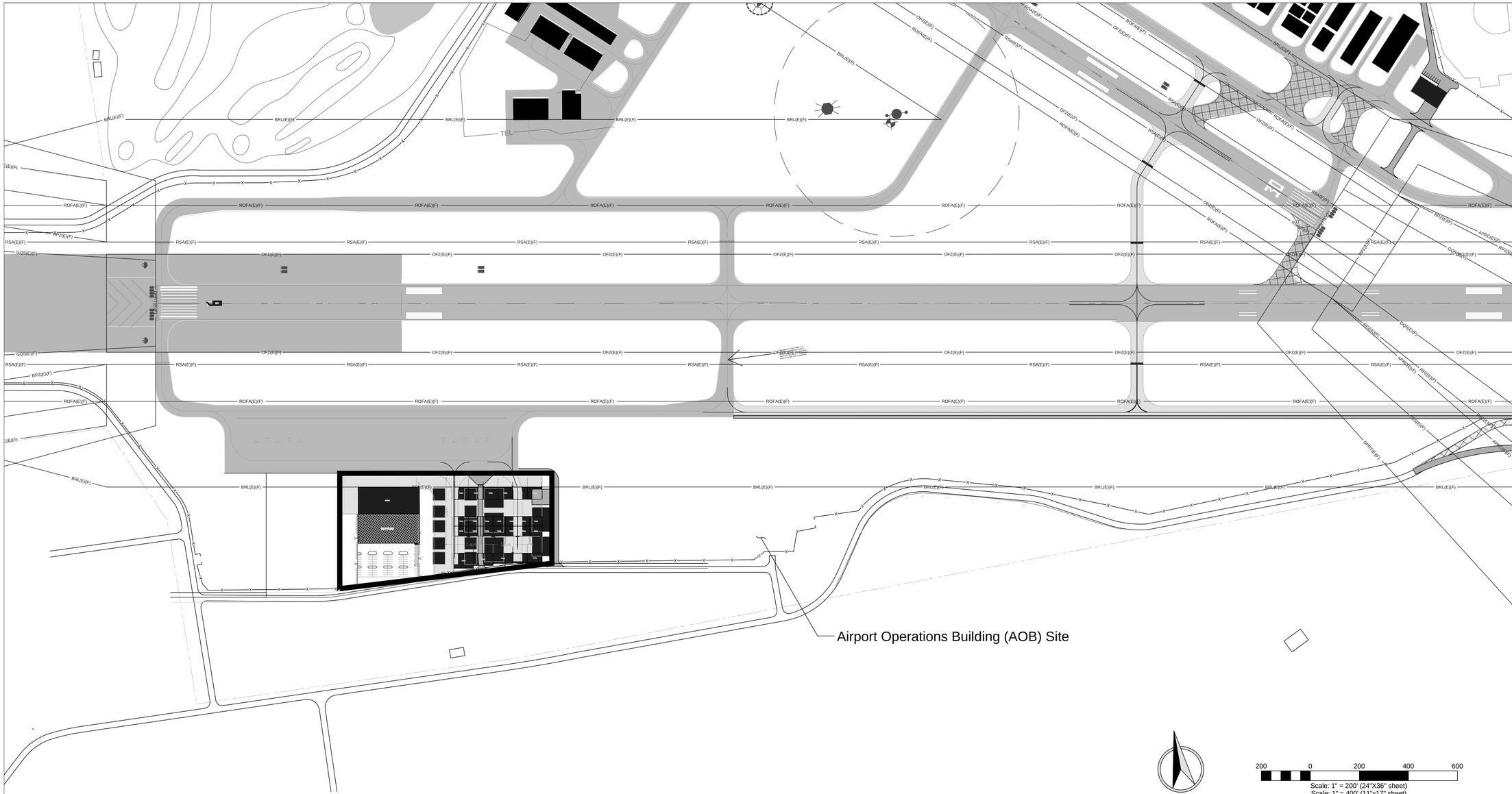

Scale: 1" = 200' (24"X36" sheet)
Scale: 1" = 400' (11"x17" sheet)

LEGEND

EXISTING	FUTURE/ULTIMATE	DESCRIPTION	EXISTING	FUTURE/ULTIMATE	DESCRIPTION
		AIRFIELD DEVELOPMENT (ASPHALT)			THRESHOLD LIGHTS
		STRUCTURE/FACILITIES (BUILDING)			REIL
		AIRPORT PROPERTY LINE (APL)			VASI/PAPI
RSA(E)	RSA(F)	RUNWAY SAFETY AREA (RSA)			AIRPORT BEACON
OFZ(E)	OFZ(F)	OBSTACLE FREE ZONE (OFZ)			WIND CONE & SEGMENTED CIRCLE
ROFA(E)	ROFA(F)	RUNWAY OBJECT FREE AREA (ROFA)			ASOS
RPZ(E)	RPZ(F)	RUNWAY PROTECTION ZONE (RPZ)			LIGHTED WINDCONE
BRL(E)	BRL(F)	BUILDING RESTRICTION LINE (BRL)		N/A	SECTION CORNER
TSA(E)	TSA(F)	TAXIWAY SAFETY AREA (TSA)			DRAINAGE / WATER EDGE
TOFA(E)	TOFA(F)	TAXIWAY OBJECT FREE AREA (TOFA)	4125 4125	N/A	CONTOURS
APRC(E)	APRC(F)	APPROACH SURFACE			ROADS
TSS(E)	TSS(F)	THRESHOLD SITING SURFACE			MARKINGS
DPRT(E)	DPRT(F)	DEPARTURE SURFACE	X	X	FENCING
GQS(E)	GQS(F)	GLIDE SLOPE QUAL. SURFACE (GQS)		N/A	LOCALIZER CRITICAL AREA
RVZ(E)	RVZ(F)	RUNWAY VISIBILITY ZONE (RVZ)			CULVERT
N/A		TO BE REMOVED			AIRPORT REFERENCE POINT (ARP)
	N/A	UTILITY POLE / LIGHT POLE		N/A	PACS/SACS MONUMENT
		PARCEL LINES		N/A	GLIDE SLOPE CRITICAL AREA

NOTE: SOME LINES AND SYMBOLS MAY NOT BE PRESENT ON DRAWING

REV NO.	DATE	REVISION DESCRIPTION	CHECKED	APPD.

REGISTERED PROFESSIONAL ENGINEER - LAND SURVEYOR - DIVISION OF PROFESSIONAL ENGINEERS - STATE OF IDAHO #21 02 12/21/17

SCALE 1"=200'	SHEET SIZE D
DRAWN BY MEE	CHECKED BY JSH
DATE 12-21-17	JOB # 1712
SHEET C4.0	
DRAWING # 1712-4.0	

AVIATION DREAMS/ OPPORTUNITIES DEVELOPMENT
LEWISTON - NEZ PERCE COUNTY REGIONAL AIRPORT
PROJECT OVERVIEW
LEWISTON, IDAHO

HEDCO
HAMMOND ENGINEERING & DEVELOPMENT CO.
528 BRYDEN AVENUE LEWISTON, IDAHO 83501
(208) 798-5422

SHEET
C4.0

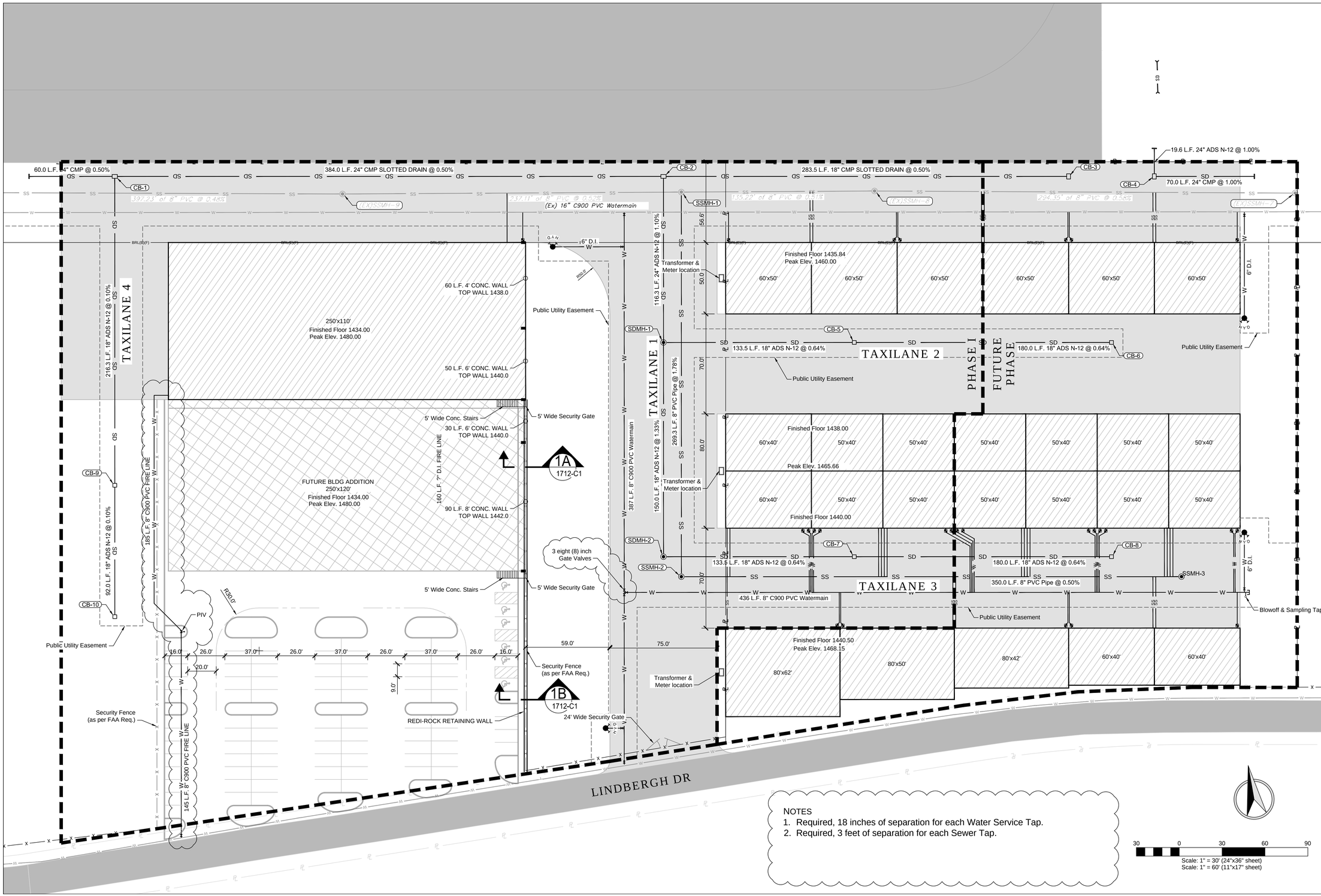

NOTES
1. Required, 18 inches of separation for each Water Service Tap.
2. Required, 3 feet of separation for each Sewer Tap.

REV'N TYPE	DATE	DESCRIPTION	CHECKED	APPD.
A	03-01-18	Revised as per City Review Comments dated January 18, 2018		

REVISION

ENGINEER, LAND SURVEYOR OR PROFESSIONAL JOB ENGINEER REGISTERED STATE OF IDAHO #21102

SCALE	SHEET SIZE
1"=30'	D
DRAWN BY: MEE	CHECKED BY: JSH
DATE: 12-21-17	JOB #: 1712
SHEET: C4.1	
DRAWING #: 1712-C4.1	

AVIATION DREAMS/ OPPORTUNITIES DEVELOPMENT
LEWISTON - NEZ PERCE COUNTY REGIONAL AIRPORT
SITE DEVELOPMENT PLAN
LEWISTON, IDAHO

HEDCO

HAMMOND ENGINEERING & DEVELOPMENT CO.
528 BRYDEN AVENUE LEWISTON, IDAHO 83501
(208) 798-5422

SHEET
C4.1

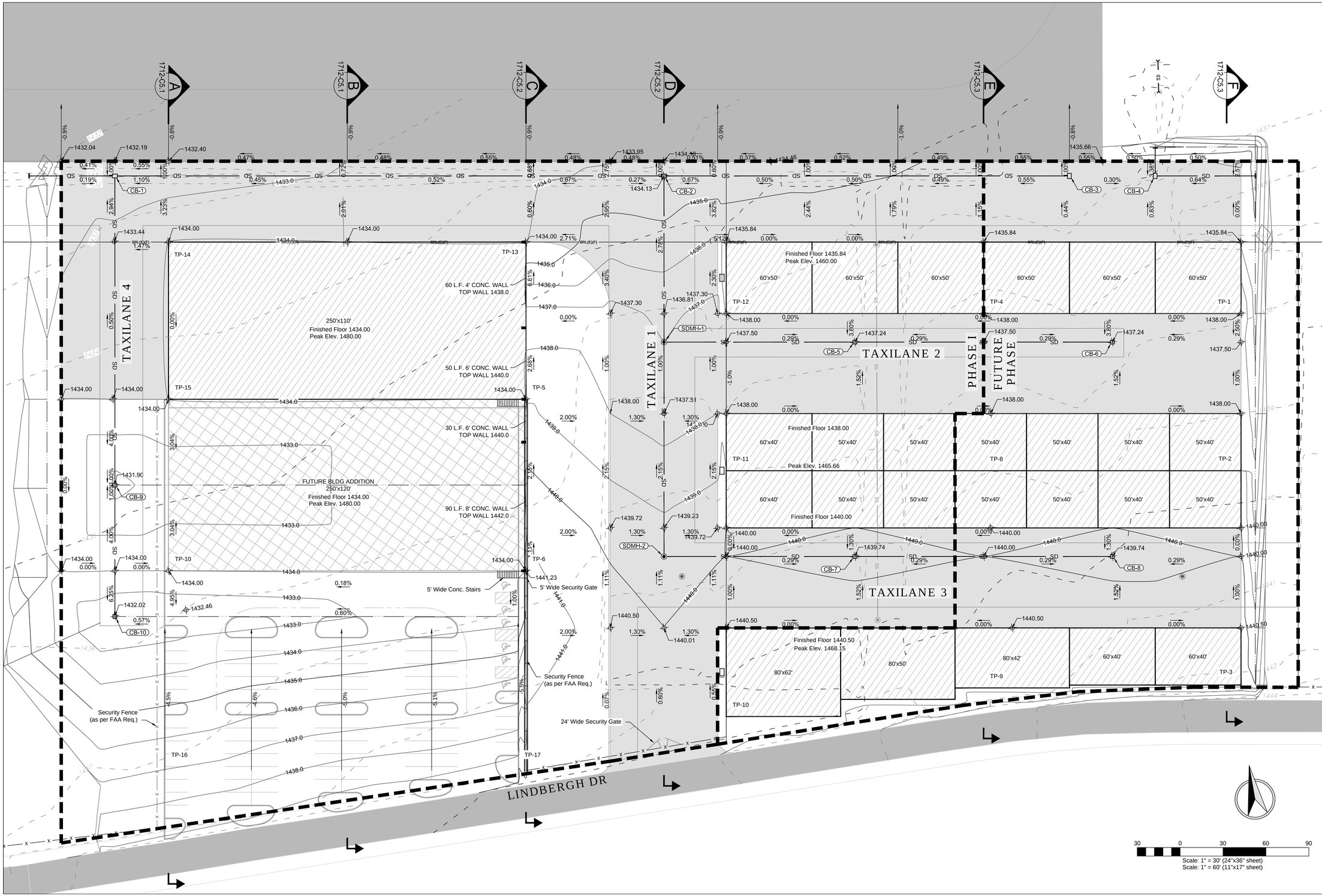

REV'T	DATE	REVISION DESCRIPTION	CHECKED	APPD.
A	03-01-18	Revised as per City Review Comments dated January 19, 2018		

REGISTERED PROFESSIONAL ENGINEER, LAND SURVEYOR OR ARCHITECT
#21102
STATE OF IDAHO
JOHN SHAMMEN

SCALE	1"=30'
SHEET SIZE	D
DRAWN BY	MEE
CHECKED BY	JSH
DATE	12-21-17
JOB #	1712
SHEET	C5.0
DRAWING #	1712-C5.0

AVIATION DREAMS/ OPPORTUNITIES DEVELOPMENT
LEWISTON - NEZ PERCE COUNTY REGIONAL AIRPORT
SITE GRADING PLAN
LEWISTON, IDAHO

HEDCO
HAMMOND ENGINEERING & DEVELOPMENT CO.
528 BRYDEN AVENUE LEWISTON, IDAHO 83501
(208) 798-5422

SHEET
C5.0

SECTION B
1"=20'H | 1"=10'V 1712-C5.0

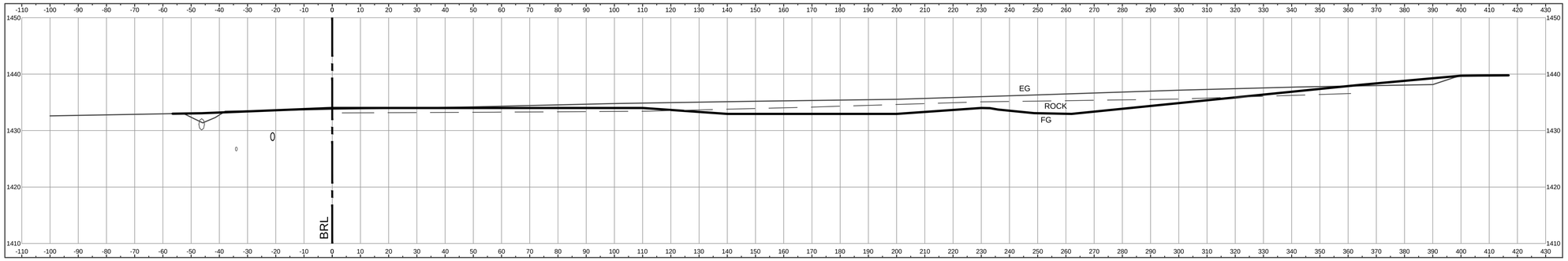

| | | |

SECTION D

1"=20'H | 1"=10'V 1712-C5.0

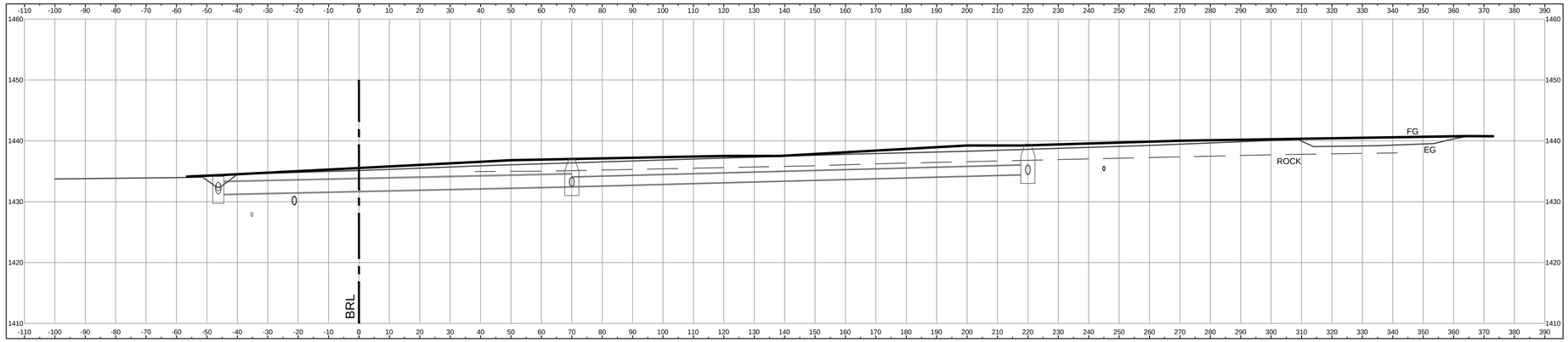

| | | |

SECTION F

1"=20'H | 1"=10'V 1712-C5.0

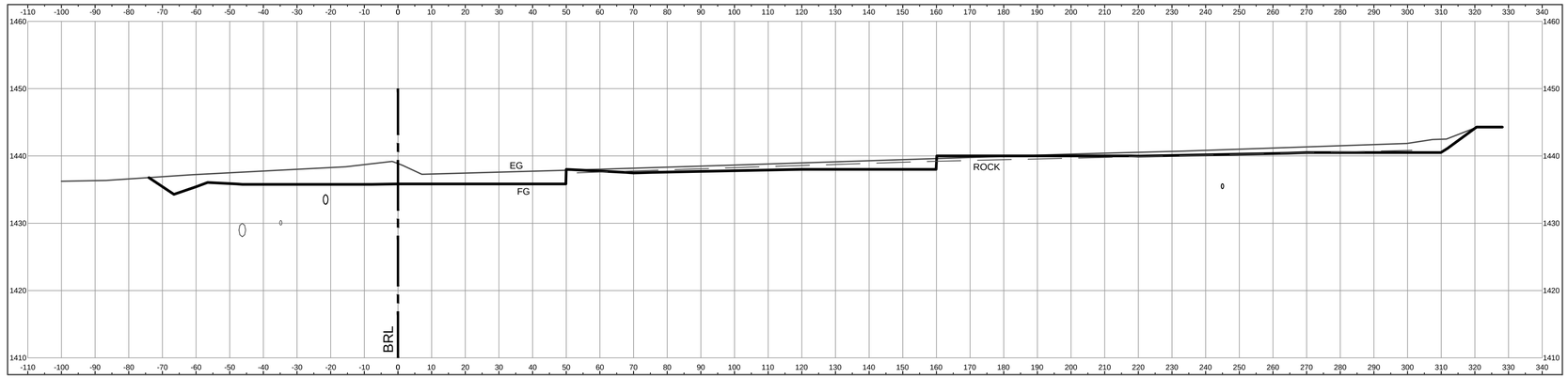

| | | |

REV	DATE	DESCRIPTION	CHECKED	APPD.
A	03-01-18	Revised as per City Review Comments dated January 18, 2018		

REVISION

ENGINEER, LAND SURVEYOR, DIVISION OF PROFESSIONAL SERVICES, REGISTERED, #21.02, STATE OF IDAHO

SCALE	SHEET SIZE
1"=20'	D
DRAWN BY: MEE	CHECKED BY: JSH
DATE: 12-21-17	JOB #: 1712
SHEET: C6.1	
DRAWING #: 1712-C6.1	

AVIATION DREAMS/ OPPORTUNITIES DEVELOPMENT
LEWISTON - NEZ PERCE COUNTY REGIONAL AIRPORT
TAXILANE 1 PLAN & PROFILE
LEWISTON, IDAHO

HEDCO
HAMMOND ENGINEERING & DEVELOPMENT CO.
528 BRYDEN AVENUE LEWISTON, IDAHO 83501
(208) 798-5422

SHEET
C6.1

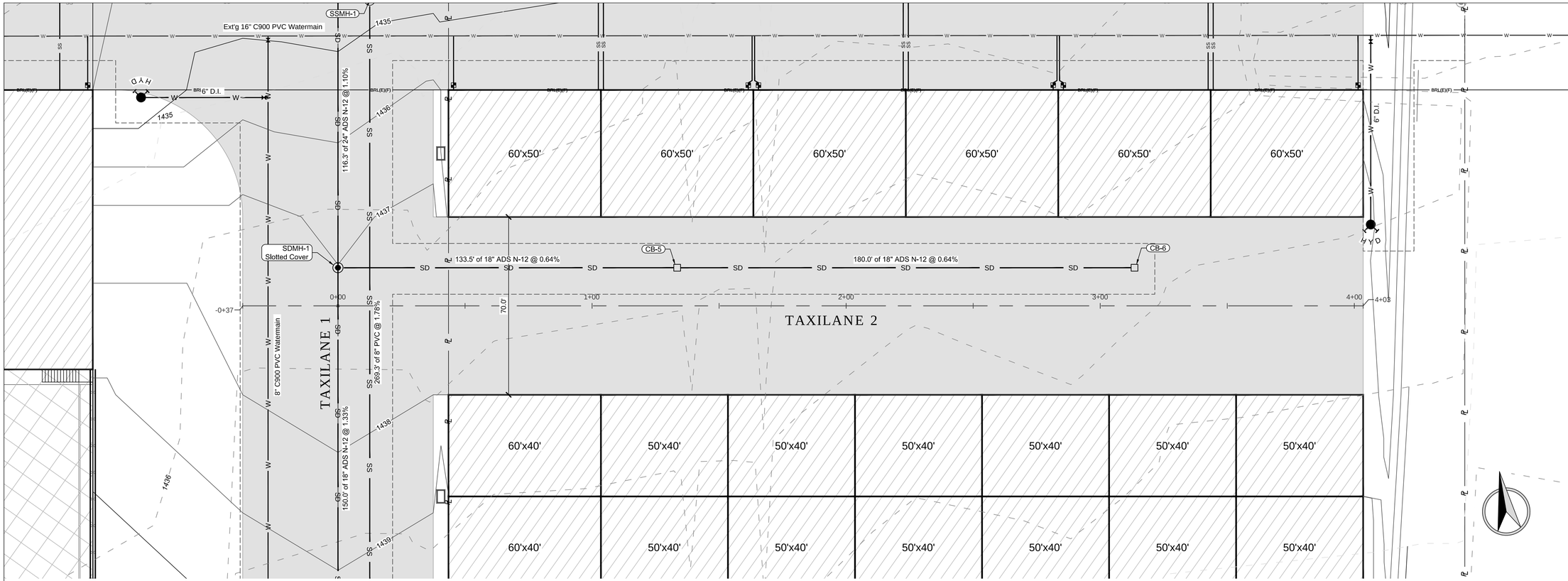

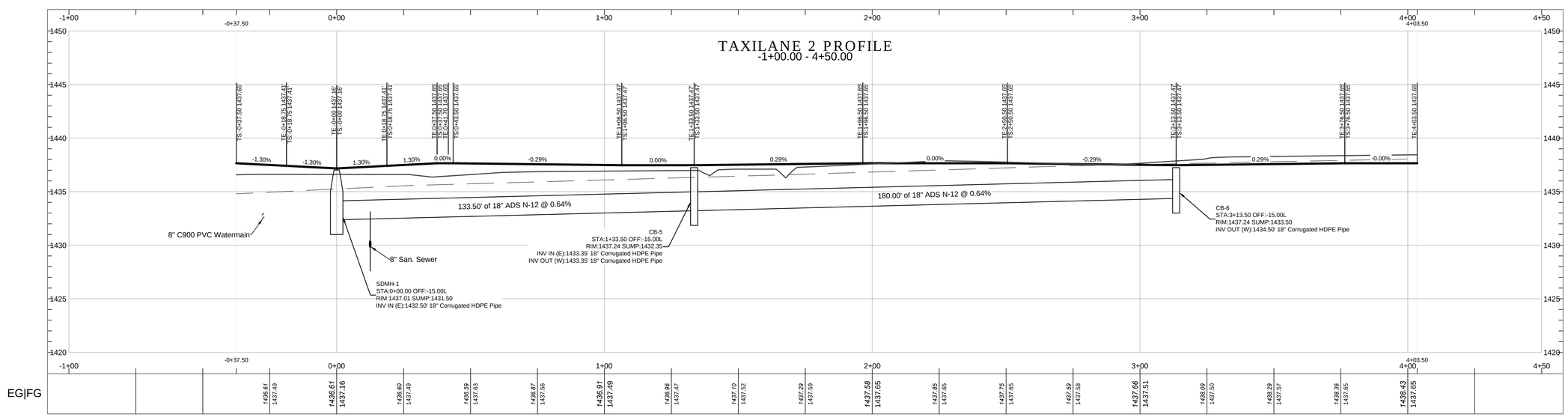

REV'D	DATE	REVISION DESCRIPTION	CHECKED	APPD.
A	03-01-18	Revised as per City Review Comments dated January 18, 2018		

SCALE 1"=20'
SHEET SIZE D
DRAWN BY MEE
CHECKED BY JSH
DATE 12-21-17
JOB # 1712
SHEET C6.2
DRAWING # 1712-C6.2

AVIATION DREAMS/ OPPORTUNITIES DEVELOPMENT
LEWISTON - NEZ PERCE COUNTY REGIONAL AIRPORT
TAXILANE 2 PLAN & PROFILE
LEWISTON, IDAHO

HEDCO
HAMMOND ENGINEERING & DEVELOPMENT CO.
528 BRYDEN AVENUE LEWISTON, IDAHO 83501
(208) 798-5422

SHEET C6.2

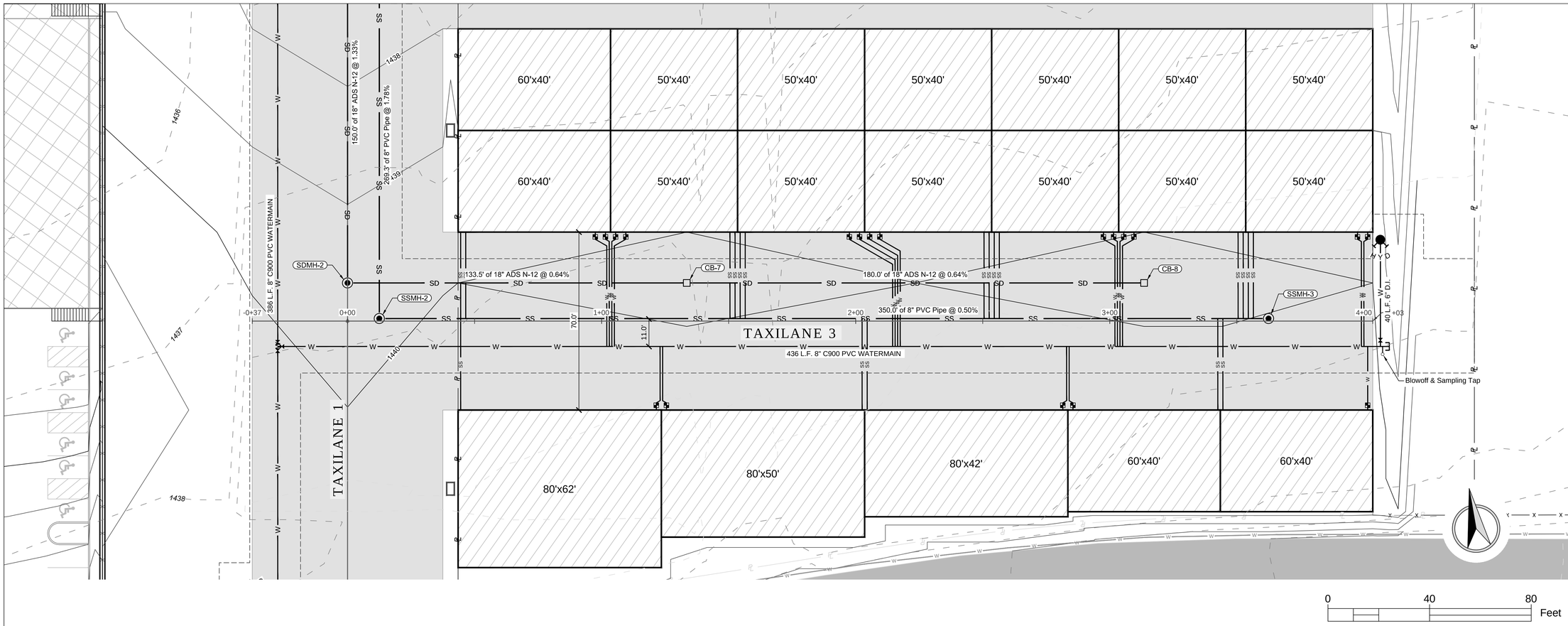

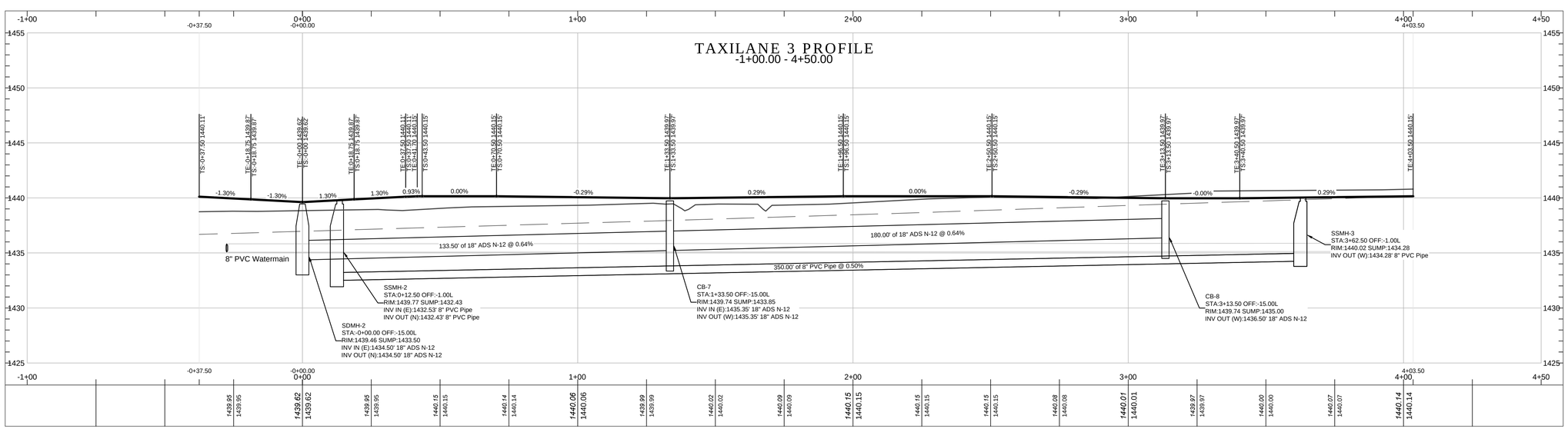

REV	DATE	DESCRIPTION	CHECKED	APPD.
A	03-01-18	Revised as per City Review Comments dated January 18, 2018		

REVISION

ENGINEER, LAND SURVEYOR, OR PROFESSIONAL SITE DESIGNER REGISTERED IN THE STATE OF IDAHO #21102

SCALE 1"=20'		SHEET SIZE D	
DRAWN BY MEE		CHECKED BY JSH	
DATE 12-21-17		JOB # 1712	
SHEET C6.3			
DRAWING # 1712-C6.3			

AVIATION DREAMS/ OPPORTUNITIES DEVELOPMENT
LEWISTON - NEZ PERCE COUNTY REGIONAL AIRPORT
TAXILANE 2 PLAN & PROFILE
LEWISTON, IDAHO

HEDCO
HAMMOND ENGINEERING & DEVELOPMENT CO.
528 BRYDEN AVENUE LEWISTON, IDAHO 83501
(208) 798-5422

SHEET
C6.3

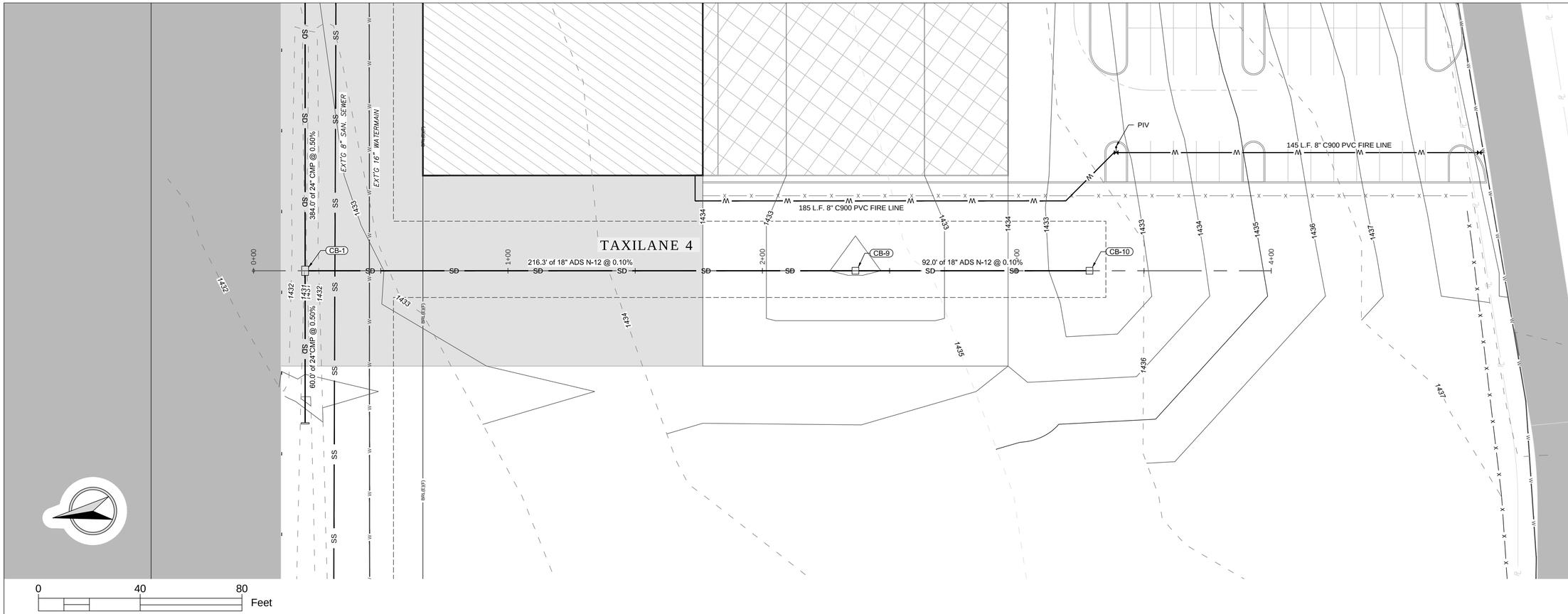

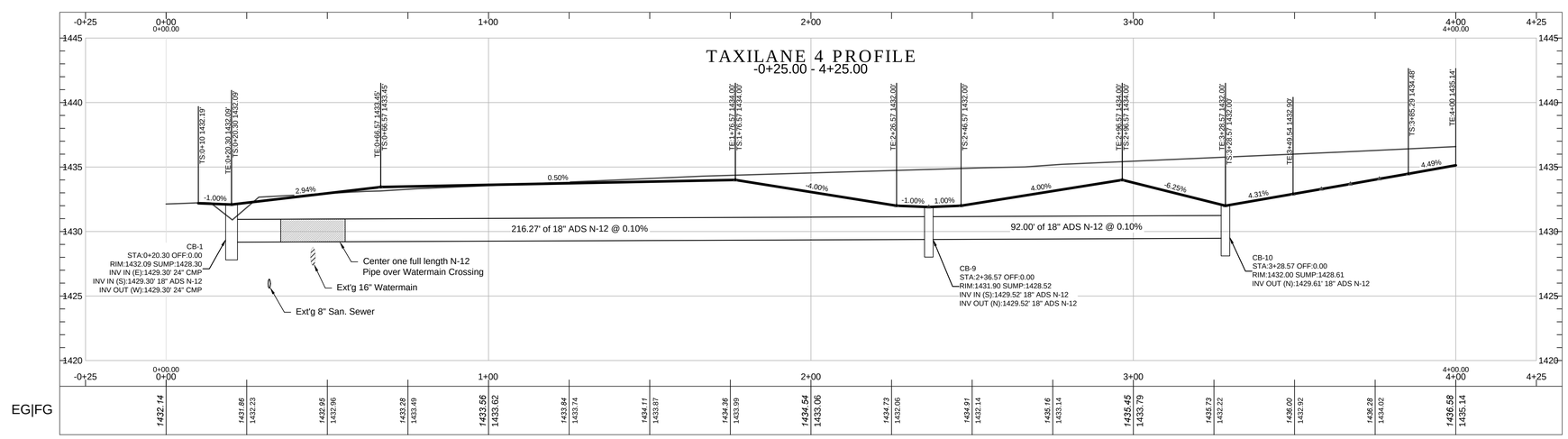

REV'N TYPE	DATE	REVISION DESCRIPTION	CHECKED	APPD.
A	03-01-18	Revised as per City Review Comments dated January 18, 2018		

REGISTERED PROFESSIONAL ENGINEER - LAND SURVEYOR - DIVISION OF PUBLIC WORKS - STATE OF IDAHO #21102

SCALE	1"=20'
SHEET SIZE	D
DRAWN BY	MEE
CHECKED BY	JSH
DATE	12-21-17
JOB #	1712
SHEET	C6.4
DRAWING #	1712-C6.4

AVIATION DREAMS/ OPPORTUNITIES DEVELOPMENT
LEWISTON - NEZ PERCE COUNTY REGIONAL AIRPORT
TAXILANE 2 PLAN & PROFILE
LEWISTON, IDAHO

HEDCO
HAMMOND ENGINEERING & DEVELOPMENT CO.
528 BRYDEN AVENUE LEWISTON, IDAHO 83501
(208) 798-5422

SHEET
C6.4

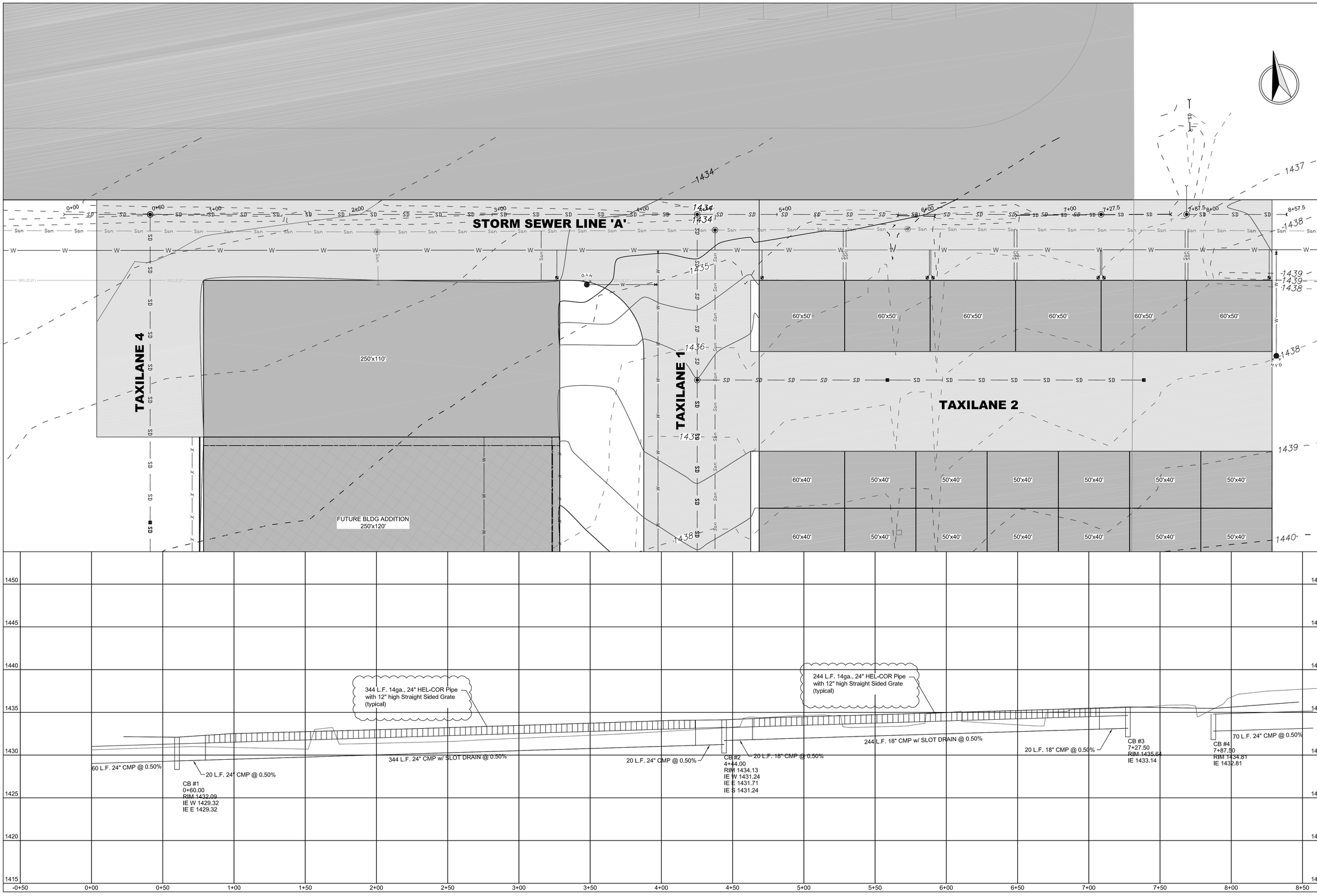

REV	DATE	REVISION DESCRIPTION	CHECKED	APPD.
A	03-01-18	Revised as per City Review Comments dated January 18, 2018		

ENGINEER, LAND SURVEYOR, OFFICIAL REGISTERED PROFESSIONAL ENGINEER, STATE OF IDAHO #21021

SCALE	1"=30'
DRAWN BY	MEE
DATE	12-21-17
SHEET SIZE	D
CHECKED BY	JSH
JOB #	1712
SHEET	C7.0
DRAWING #	1712-C7.0

AVIATION DREAMS/ OPPORTUNITIES DEVELOPMENT
LEWISTON - NEZ PERCE COUNTY REGIONAL AIRPORT
STORM SEWER LINE A - PLAN & PROFILE
LEWISTON, IDAHO

HEDCO
HAMMOND ENGINEERING & DEVELOPMENT CO.
528 BRYDEN AVENUE LEWISTON, IDAHO 83501
(208) 798-5422

SHEET
C7.0

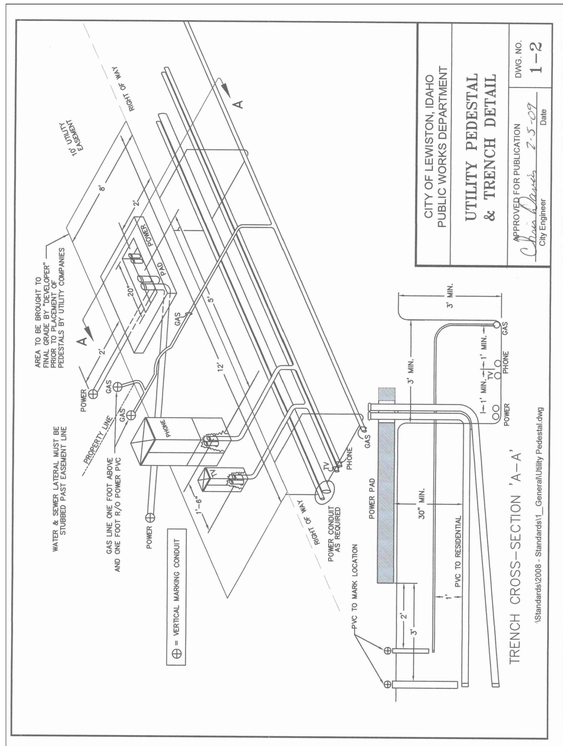

CITY OF LEWISTON, IDAHO
PUBLIC WORKS DEPARTMENT

UTILITY PEDESTAL & TRENCH DETAIL

APPROVED FOR PUBLICATION — City Engineer — Date 2-5-09

DWG. NO. 1-2

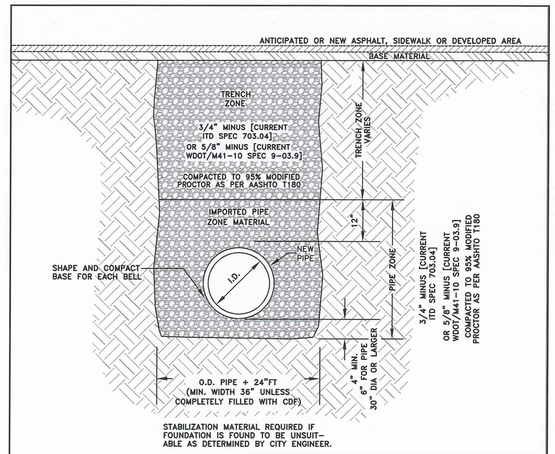

CLASS 'D' 'NEW STREET CONSTRUCTION' BACKFILL SHALL BE USED IN AREAS WHERE ASPHALT PAVEMENT, CONCRETE CURB, SIDEWALK, DRIVEWAYS & GRAVEL SURFACING IS ANTICIPATED.

NOTES:

1. CONTRACTOR SHALL COMPLY WITH THE MOST CURRENT OSHA REQUIREMENTS FOR EXCAVATIONS.
2. CLASS 'D' BACKFILL SHALL COMPLY WITH REQUIREMENTS OF THE CITY'S STANDARDS CONSTRUCTION SPECIFICATIONS.
3. TRENCH MATERIAL SHALL BE PLACED IN MAX. OF 6" LIFTS.
4. IN EXISTING RIGHT-OF-WAY TRENCH EXCAVATION SHALL NOT BE MORE THAN 100 FEET AHEAD OF THE PIPE LAYING OPERATION.
5. TRENCHES ARE TO BE BACKFILLED AT THE END OF EACH DAY.
6. ANY ALTERATIONS TO THIS STANDARD MUST HAVE WRITTEN APPROVAL BY CITY ENGINEER.

CITY OF LEWISTON, IDAHO
PUBLIC WORKS DEPARTMENT

BACKFILL CLASS 'D'

APPROVED FOR PUBLICATION — City Engineer — Date 2/5/13

DWG. NO. 1-6

...\Current Stds\1-General\BackFill_ClassD.dwg

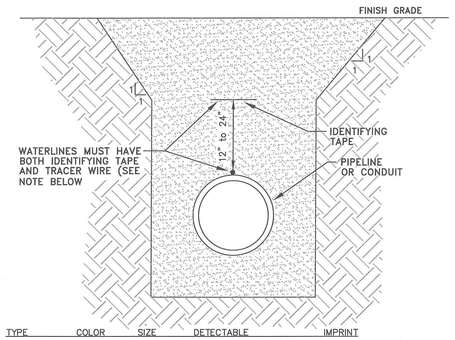

TYPE	COLOR	SIZE	DETECTABLE	IMPRINT
WATER	BLUE	3"	NO	CAUTION BURIED WATER LINE BELOW

NO. 12 AWG. COPPER TRACER WIRE INSULATED WITH 30 MIL OF HIGH DENSITY POLYETHYLENE (HDPE) CLASSIFIED AS HIGH MOLECULAR WEIGHT POLYETHYLENE (HMWPE) IN 500 FT REELS. WIRE SHALL BE ATTACHED TO WATERLINE AT INTERVALS NOT TO EXCEED 15 FT SEPARATION.

ALL SPLICES SHALL BE 3M DIRECT BURY SPLICE KIT DBR/Y-6 AND CONTRACTOR SHALL CONDUCT A CONDUCTIVITY TEST ON ALL LOCATING WIRE SPLICES.

TYPE	COLOR	SIZE	DETECTABLE	IMPRINT
STORM SEWER	GREEN	3"	NO	CAUTION BURIED STORM SEWER LINE BELOW
SANITARY SEWER	GREEN	3"	NO	CAUTION BURIED SEWER LINE BELOW
GAS	YELLOW	3"	NO	CAUTION BURIED GAS LINE BELOW
CABLE	ORANGE	3"	NO	CAUTION BURIED CABLE LINE BELOW
ELECTRICAL	RED	3"	NO	CAUTION BURIED ELECTRIC LINE BELOW

CITY OF LEWISTON, IDAHO
PUBLIC WORKS DEPARTMENT

IDENTIFYING TAPE DETAIL

APPROVED FOR PUBLICATION — City Engineer — Date 2/11/16

DWG. NO. 1-8

...\Current Stds\1-General\Identifying Tape.dwg

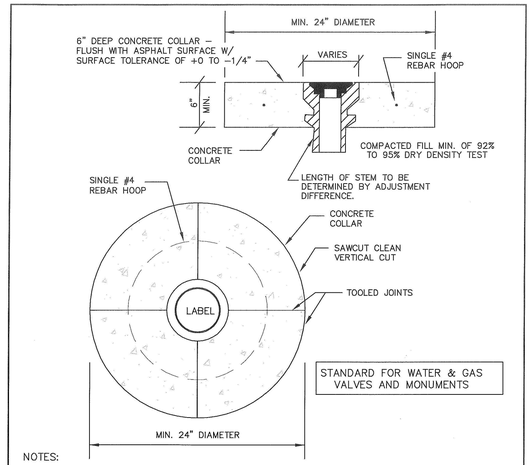

STANDARD FOR WATER & GAS VALVES AND MONUMENTS

NOTES:

1.) A CIRCULAR-SHAPED CONCRETE COLLAR IS REQUIRED ON ALL INSTALLATIONS; IN BOTH PAVED OR UNIMPROVED AREAS. INSTALL A 6" THICK CONCRETE COLLAR THAT SHALL BE FLUSH WITH THE ASPHALT SURFACE WITH A SURFACE TOLERANCE OF +0 TO -1/4".
2.) CONCRETE SHALL BE 3,000 PSI MIN. AT 28 DAYS, WATER/CEMENT RATIO SHALL BE 0.5, 3" MAX. SLUMP AND 3% TO 6% ENTRAINED AIR WITH ONE #4 REBAR HOOP. FIBER-REINFORCED CONCRETE (ADDED PER MANUFACTURER'S RECOMMENDATIONS) MAY BE USED IN LIEU OF #4 REBAR.
3.) ALL EDGES WILL BE SEALED WITH CSSI OR APPROVED EQUAL; ALL TOP EDGES WILL BE TACKED AND SAND SEALED.
4.) UTILITY FRAMES AND LIDS ARE PREFERRED OUTSIDE OF WHEEL PATH, WHERE POSSIBLE.

...Current Stds\1-General\Adjust Utilities.dwg

CITY OF LEWISTON, IDAHO
PUBLIC WORKS DEPARTMENT

WATER & GAS VALVES, AND MONUMENTS ADJUST UTILITIES

APPROVED FOR PUBLICATION — City Engineer — Date 12/19/17

DWG. NO. 1-10

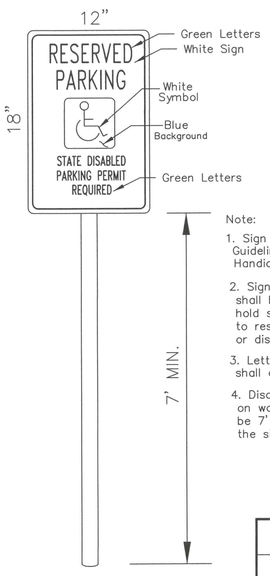

Note:

1. Sign follows the State Specific Guidelines for 12x18 Washington Handicapped Parking
2. Sign posts and their foundation shall be constructed as to hold signs in a proper position to resist swaying in the wind or displacement by vandalism.
3. Lettering & reflectorization shall conform to MUTCD
4. Disabled parking sign mounted on walls or buildings shall also be 7' min. to the bottom of the sign to finished grade.

CITY OF LEWISTON, IDAHO
PUBLIC WORKS DEPARTMENT

DISABLED PARKING SIGN INSTALLATION

APPROVED FOR PUBLICATION — City Engineer — Date 2-5-09

DWG. NO. 1-13

M:\Standards\2008 - Standards\1__General\Disabled__Parking

TYPICAL DISABLED PARKING STALL

Striping shall be blue in color.

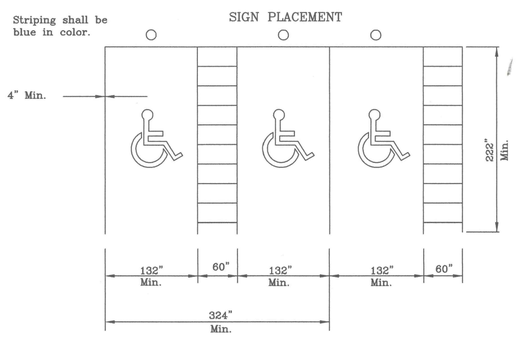

Notes:

1. The international accessibility symbol as provided in section 49-410 Idaho Code shall be painted in each space.
2. Disabled parking stalls and access aisles shall not slope more than 2% in any direction.
3. If a curb ramp is required, it cannot project into the access aisle.
4. Each access aisle must connect directly to an accessible route.
5. Intent of this standard is to conform to ADA and ANSI requirements. These requirements shall take precedence over this standard.

M:\Standards\2008 - Standards\1__General\Disabled__Stalls.dwg

CITY OF LEWISTON, IDAHO
PUBLIC WORKS DEPARTMENT

DISABLED PARKING STALLS

APPROVED FOR PUBLICATION — City Engineer — Date 2-5-09

DWG. NO. 1-14

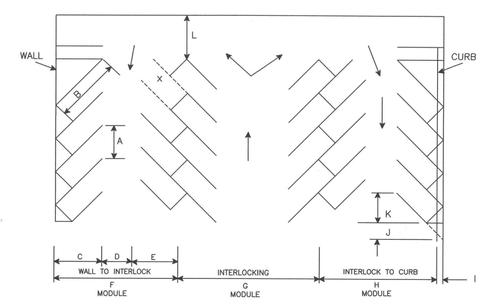

x= Stall not accessible in certain layouts
Parking layout dimension (in ft.) for 9' x 18.5' stalls at various angles.

Dimension	On diagram	Angle 45°	60°	75°	90°
Stall width, parallel to aisle	A	12.7	10.4	9.3	9.0
Stall length of line	B	27.5	23.7	20.9	18.5
Stall depth to wall	C	19.5	20.5	20.0	18.5
Aisle width between stall lines	D	12.0	16.0	23.0	26.0
Stall depth, interlock	E	16.5	18.5	18.5	18.5
Module, wall to interlock	F	48.0	55.0	62.0	63.0
Module, interlocking	G	45.0	53.0	61.0	63.0
Module, interlock to curb face	H	46.0	53.2	59.5	60.5
Bumper overhang (typical)	I	2.0	2.3	2.5	2.5
Offset	J	6.4	2.6	0.6	0.0
Setback	K	13.1	9.3	4.8	0.0
Cross aisle, one-way	L	14.0	14.0	14.0	14.0
Cross aisle, two-way	_	24.0	24.0	24.0	24.0

The minimum width of parking stalls is 9 ft., however the recommended stall width for high turnover parking lots is 10 ft. The inclusion of handicapped parking is required by City Code Sec. 37-148.

Parallel parking stalls shall be 8' wide x 23' long.

M:\Standards\2008-Standards\1-General\Parking__Layout.dwg

CITY OF LEWISTON, IDAHO
PUBLIC WORKS DEPARTMENT

PARKING LAYOUT DIMENSIONS

APPROVED FOR PUBLICATION — City Engineer — Date 2-5-09

DWG. NO. 1-15

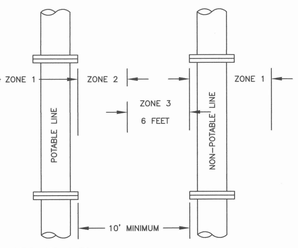

HORIZONTAL REQUIREMENTS:

ZONE 1: MORE THAN 10 FEET APART
NO SPECIAL REQUIREMENTS

ZONE 2: FROM 6 TO 10 FEET APART
A. No special requirements for service lines.
B. Potable and non-potable mains separated by at least 6 feet at outside walls and
i. Potable mains higher in elevation than the non-potable mains and
ii. Non-potable mains constructed to with potable water class pipe and pressure tested for water tightness.

ZONE 3: CLOSER THAN 6 FEET APART
NOT ALLOWED

VERTICAL REQUIREMENTS:

ZONE 1: POTABLE LINE 18" OVER NON-POTABLE LINE
Potable water and non-potable mains and service lines must be separated by at least 18 inches and
One full, uncut length of non-potable pipe must be centered on the crossing so that the joints are as far as possible from the crossing.

ZONE 2: POTABLE LINE < 18" OVER NON-POTABLE LINE
One full, uncut length of non-potable pipe must be centered on the crossing so that the joints are as far as possible from the non-potable line and either a or b
a) Non-potable line must be constructed to potable water pipe standards and pressure tested for water tightness for a horizontal distance of ten feet on both sides of the crossing.
b) Non-potable or potable line must be cased in a larger diameter carrier pipe for a horizontal distance of ten feet on both sides of the crossing, with no joints.

ZONE 3: POTABLE WATER < 18" UNDER NON-POTABLE LINE
Same requirements as Zone 2 except the non-potable line must also be supported above the crossing to prevent settling.

ZONE 4: POTABLE WATER 18" UNDER NON-POTABLE LINE
Same requirements as Zone 1 except the non-potable line must also be supported above the crossing to prevent settling.

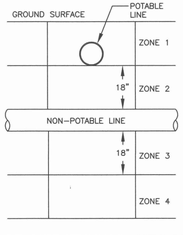

GENERAL NOTES:

1. Sewage force mains shall have at least ten feet of horizontal separation and eighteen inches of clearance from potable water mains. Zone 2 and 3 placements are prohibited.
2. Separation requirements also apply to potable and non-potable service lines controlled by the system owner and extending the main line to the property line, service meter, or cleanout.

M:\Standards\2010-Standards\4-Water\Potable Nonpotable.dwg

CITY OF LEWISTON, IDAHO
PUBLIC WORKS DEPARTMENT

POTABLE & NON-POTABLE WATERLINE SEPARATION

APPROVED FOR PUBLICATION — City Engineer — Date 11-9-09

DWG. NO. 4-1

REV NO.	DATE	REVISION DESCRIPTION	CHECKED	APPD.

REGISTERED PROFESSIONAL ENGINEER, LAND SURVEYOR, DIVISION OF PUBLIC SAFETY, STATE OF IDAHO #2102

SCALE | SHEET SIZE D | DRAWN BY MEE | CHECKED BY JSH | DATE 12-23-17 | JOB # 1712 | SHEET C8.0 | DRAWING # 1712-C8.0

AVIATION DREAMS/OPPORTUNITIES DEVELOPMENT
LEWISTON - NEZ PERCE COUNTY REGIONAL AIRPORT
STANDARD DRAWINGS
LEWISTON, IDAHO

HEDCO
HAMMOND ENGINEERING & DEVELOPMENT CO.
528 BRYDEN AVENUE LEWISTON, IDAHO 83501
(208) 798-5422

SHEET C8.0

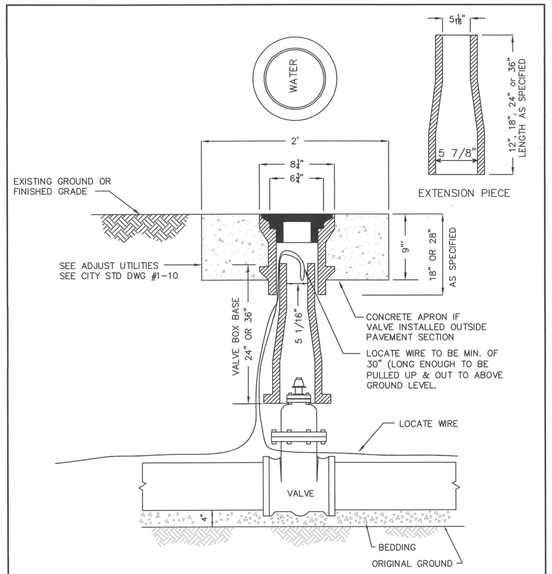

CITY OF LEWISTON, IDAHO
PUBLIC WORKS DEPARTMENT

GATE VALVE BOX WITH ASSEMBLY

APPROVED FOR PUBLICATION — City Engineer — Date 11-9-09 — DWG. NO. 4-2

M:\Standards\2010-Standards\4-Water\Cast Iron Valve Box.dwg

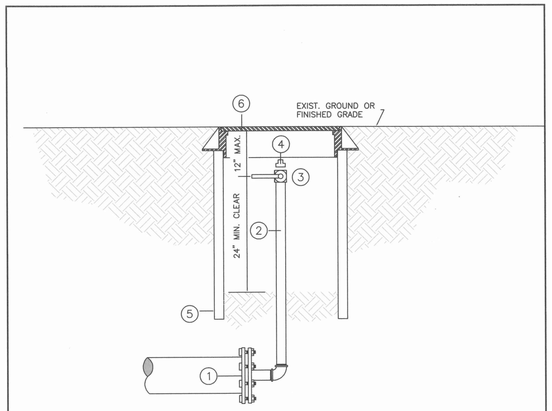

REQUIRED COMPONENTS

1. CAP OR PLUG ON WATER MAIN
2. 2" GALVANIZED PIPE
3. 2" BALL VALVE
4. 2" THREADED PLUG
5. 24" HDPE PIPE
6. OLYMPIC FOUNDRY MH-23 MANHOLE & COVER
7. THRUST BLOCK OR RESTRAINTS (NOT SHOWN)

CITY OF LEWISTON, IDAHO
PUBLIC WORKS DEPARTMENT

COMBINATION BLOWOFF AND SAMPLING TAP

APPROVED FOR PUBLICATION — City Engineer — Date 11-9-09 — DWG. NO. 4-3

M:\Standards\2010-Standards\4-Waten\Blowoff Sample.dwg

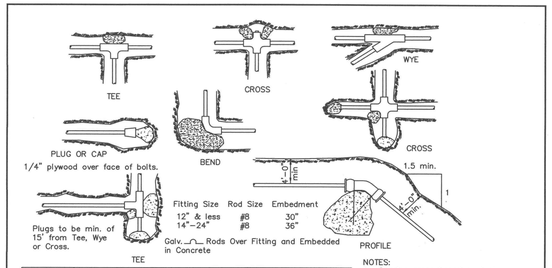

Fitting Size	BEARING AREA OF THRUST BLOCKS IN SQ. FT.				
	Tee, Wye, Plub or Cap	90° Bend Plugged Cross; Tee	45° Bend	22 1/2° Bend	11 1/4° Bend
4	1.0	1.4	1.0	--	--
6	2.1	3.0	1.6	1.0	--
8	3.8	5.3	2.9	1.5	1.0
10	5.9	8.4	4.6	2.4	1.2
12	8.5	12.0	6.6	3.4	1.7
14	11.5	16.3	8.9	4.6	2.3
16	15.0	21.3	11.6	6.0	3.0
18	19.0	27.0	14.6	7.6	3.8
20	23.5	33.3	18.1	9.4	4.7
24	34.0	48.0	26.2	13.6	6.8

Fitting Size	VOLUME OF THRUST BLOCK IN CU.YD.			
	90° BEND	45° BEND	22 1/2° BEND	11 1/4° BEND
4	--	--	--	--
6	1.3	--	--	--
8	2.3	1.1	--	--
10	3.7	1.8	--	--
12	5.5	2.8	1.2	--
14	7.6	3.9	1.7	--
16	9.9	5.1	2.3	0.9
18	--	6.3	3.2	1.4
20	--	7.7	4.0	1.8
24	--	11.1	5.7	2.6

NOTE:
Above volumes based on test pressure of 150 p.s.i. & the weight of concrete = 4050 lbs./cu.yd. To compare volumes for different test pressures use the following equation:

VOLUME = (150 p.s.i. test pressure) x (table value).

Thrust blocks for vertical up-bends shall be the same as for horizontal bends.

NOTES:
1. Bearing areas based on test pressure of 150 p.s.i. & soil bearing stress of 2,000 lbs. per sq.ft. To areas for different test pressure & soil bearing stresses, following equation: BEARING AREA = (150 p.s.i. test pressure)x(2000 lbs soil bearing stress)x(table value).
2. Concrete thrust blocking to be placed against undisturbed earth.
3. Keep concrete clear of joint and accessories.
4. The required thrust bearing areas for special connections are shown encircled on the plans;e.g. 15 indicates 15 sq. ft. bearing area required.
5. If not shown on plans, required bearing areas at fittings shall be as indicated above, adjusted if necessary, to conform to the test pressure(s) & allowable soil bearing stress(es) stated in the Special Specifications.
6. Bearing areas & special blocking details shown on plans take precedence over bearing areas & blocking details shown on this standard detail.
7. Concrete Compressive Strength shall be 2,500 p.s.i. minimum.
8. Concrete will be allowed 48 hrs. to set if high early yield concrete is used, otherwise, 7 days curing will be required.

M:\Standards\2010-Standards\4-Water\Thrust Blocking.dwg

CITY OF LEWISTON, IDAHO
PUBLIC WORKS DEPARTMENT

THRUST BLOCKING DETAIL

APPROVED FOR PUBLICATION — City Engineer — Date 11-9-09 — DWG. NO. 4-4

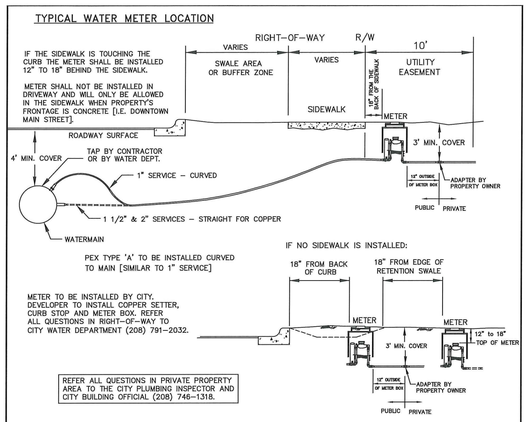

GENERAL NOTES:
1. WATER SERVICE LINES SHALL HAVE A MINIMUM COVER OF (3) THREE FEET MEASURED FROM THE FINISHED GROUND SURFACE.
2. SERVICE LINE SHALL BE BACKFILLED AND BEDDED WITH 3" OF SAND OR SOIL FREE OF ORGANIC MATERIAL, ROCK OR OTHER MATERIAL THAT COULD DAMAGE SERVICE LINE.
3. THE TOP OF THE METER SHALL BE 12" TO 18" DEEP.

SHEET 2 OF 2

...\Current Stds\4-Water\Water Service Location.dwg

CITY OF LEWISTON, IDAHO
PUBLIC WORKS DEPARTMENT

TYPICAL WATER METER or UTILITY MARKER LOCATION

APPROVED FOR PUBLICATION — City Engineer — Date 3/17/15 — DWG. NO. 4-5

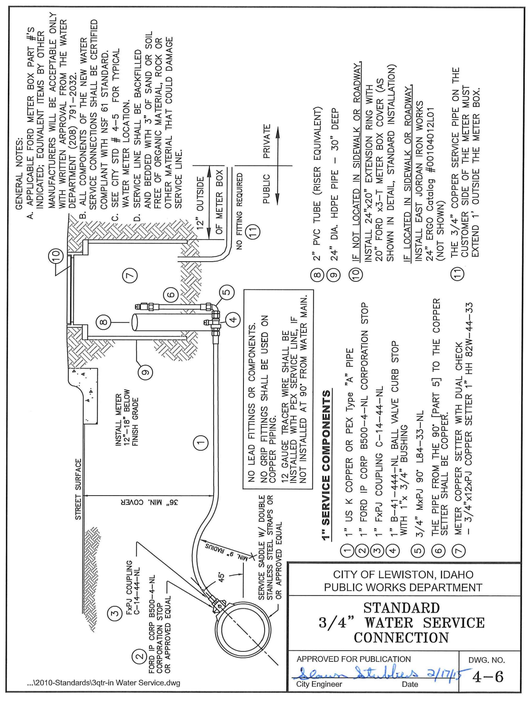

...\2010-Standards\3qtr-in Water Service.dwg

CITY OF LEWISTON, IDAHO
PUBLIC WORKS DEPARTMENT

STANDARD 3/4" WATER SERVICE CONNECTION

APPROVED FOR PUBLICATION — City Engineer — Date 3/17/15 — DWG. NO. 4-6

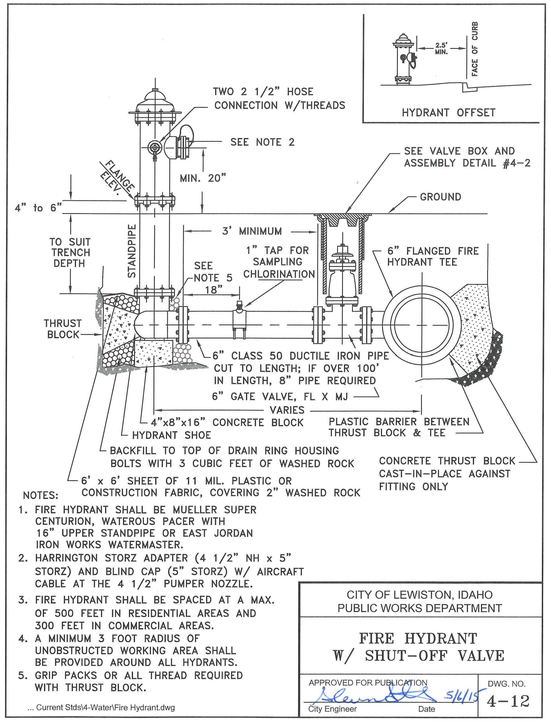

NOTES:
1. FIRE HYDRANT SHALL BE MUELLER SUPER CENTURION, WATEROUS PACER WITH 16" UPPER STANDPIPE OR EAST JORDAN IRON WORKS WATERMASTER.
2. HARRINGTON STORZ ADAPTER (4 1/2" NH x 5" STORZ) AND BLIND CAP (5" STORZ) W/ AIRCRAFT CABLE AT THE 4 1/2" PUMPER NOZZLE.
3. FIRE HYDRANT SHALL BE SPACED AT A MAX. OF 500 FEET IN RESIDENTIAL AREAS AND 300 FEET IN COMMERCIAL AREAS.
4. A MINIMUM 3 FOOT RADIUS OF UNOBSTRUCTED WORKING AREA SHALL BE PROVIDED AROUND ALL HYDRANTS.
5. GRIP PACKS OR ALL THREAD REQUIRED WITH THRUST BLOCK.

... Current Stds\4-Water\Fire Hydrant.dwg

CITY OF LEWISTON, IDAHO
PUBLIC WORKS DEPARTMENT

FIRE HYDRANT W/ SHUT-OFF VALVE

APPROVED FOR PUBLICATION — City Engineer — Date 5/4/15 — DWG. NO. 4-12

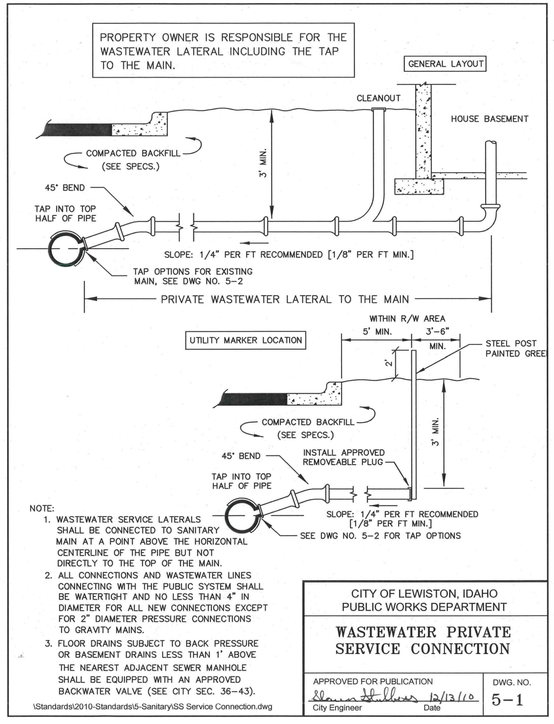

NOTE:
1. WASTEWATER SERVICE LATERALS SHALL BE CONNECTED TO SANITARY MAIN AT A POINT ABOVE THE HORIZONTAL CENTERLINE OF THE PIPE BUT NOT DIRECTLY TO THE TOP OF THE MAIN.
2. ALL CONNECTIONS AND WASTEWATER LINES CONNECTING WITH THE PUBLIC SYSTEM SHALL BE WATERTIGHT AND NO LESS THAN 4" IN DIAMETER FOR ALL NEW CONNECTIONS EXCEPT FOR 2" DIAMETER PRESSURE CONNECTIONS TO GRAVITY MAINS.
3. FLOOR DRAINS SUBJECT TO BACK PRESSURE OR BASEMENT DRAINS LESS THAN 1' ABOVE THE NEAREST ADJACENT SEWER MANHOLE SHALL BE EQUIPPED WITH AN APPROVED BACKWATER VALVE (SEE CITY SEC. 36-43).

\Standards\2010-Standards\5-Sanitary\SS Service Connection.dwg

CITY OF LEWISTON, IDAHO
PUBLIC WORKS DEPARTMENT

WASTEWATER PRIVATE SERVICE CONNECTION

APPROVED FOR PUBLICATION — City Engineer — Date 12/13/10 — DWG. NO. 5-1

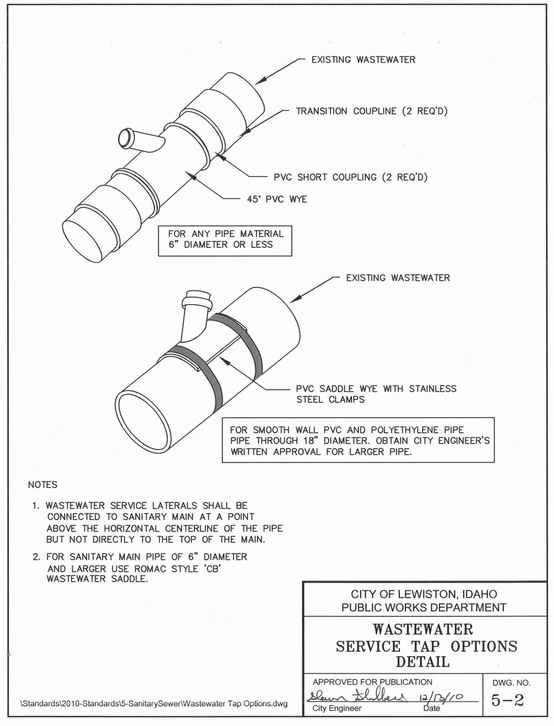

NOTES

1. WASTEWATER SERVICE LATERALS SHALL BE CONNECTED TO SANITARY MAIN AT A POINT ABOVE THE HORIZONTAL CENTERLINE OF THE PIPE BUT NOT DIRECTLY TO THE TOP OF THE MAIN.
2. FOR SANITARY MAIN PIPE OF 6" DIAMETER AND LARGER USE ROMAC STYLE 'CB' WASTEWATER SADDLE.

\Standards\2010-Standards\5-SanitarySewer\Wastewater Tap Options.dwg

CITY OF LEWISTON, IDAHO
PUBLIC WORKS DEPARTMENT

WASTEWATER SERVICE TAP OPTIONS DETAIL

APPROVED FOR PUBLICATION — City Engineer — Date 12/13/10 — DWG. NO. 5-2

REV	DATE	REVISION DESCRIPTION	CHECKED	APPD.
A	01-25-18	Revised as per City Review Comments dated January 18, 2018		

REGISTERED PROFESSIONAL ENGINEER - LAND SURVEYOR - STATE OF IDAHO #2102

SHEET SIZE D | SCALE | DRAWN BY MEE | CHECKED BY JSH | DATE 12-21-17 | JOB # 1712 | SHEET C8.1 | DRAWING # 1712-C8.1

AVIATION DREAMS/OPPORTUNITIES DEVELOPMENT
LEWISTON - NEZ PERCE COUNTY REGIONAL AIRPORT
STANDARD DRAWINGS
LEWISTON, IDAHO

HEDCO
HAMMOND ENGINEERING & DEVELOPMENT CO.
528 BRYDEN AVENUE LEWISTON, IDAHO 83501
(208) 798-5422

SHEET C8.1

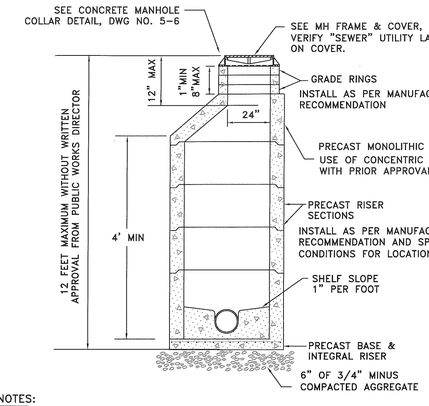

NOTES:

1. ALL UNITS TO MEET OR EXCEED THE REQUIREMENTS OF ASTM C478/AASHTO M199. JOINTS SHALL BE RUBBER GASKET CONFORMING TO ASTM C443 AND SHALL BE GROUTED FROM THE INSIDE. LIFT HOLES SHALL BE GROUTED FROM THE OUTSIDE AND INSIDE OF THE MANHOLE.
2. PRECAST BASES SHALL BE FURNISHED WITH CUTOUTS OR KNOCKOUTS. KNOCKOUTS SHALL HAVE A WALL THICKNESS OF 2" MINIMUM
3. CONNECTION TO MANHOLE SHALL BE MADE USING RESILIENT CONNECTOR CONFORMING TO ASTM C-923 SUCH AS KOR-N-SEAL, A-LOK OR APPROVED EQUAL.
4. RISERS, UNIT SECTIONS AND THE FRAME SHALL NOT BE MORE THAN ONE INCH OUT OF ALIGNMENT WITH THE MANHOLE BASE; PIPES SHALL BE FLUSH WITH INSIDE EDGE OF MANHOLE.
5. PRESSURE TESTING IS REQUIRED FOR ALL INSTALLATIONS.
6. SEE DWG NO 5-6 FOR CONCRETE MANHOLE COLLAR.
7. MAXIMUM SPACING BETWEEN MANHOLES IS 400 FEET.

CITY OF LEWISTON, IDAHO
PUBLIC WORKS DEPARTMENT

WASTEWATER
TYPE 1 MANHOLE

APPROVED FOR PUBLICATION 11/21/16 City Engineer Date — DWG. NO. 5-3

\Standards Dwgs - City\Current Stds\5-SanitarySewer\SS MH Type 1.dwg

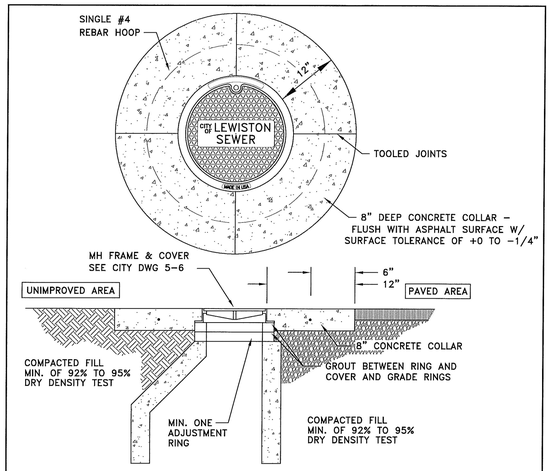

NOTES:

1. A CIRCULAR-SHAPED CONCRETE COLLAR IS REQUIRED ON ALL INSTALLATIONS; IN BOTH PAVED OR UNIMPROVED AREAS. INSTALL A 8" THICK CONCRETE COLLAR THAT SHALL BE FLUSH WITH THE ASPHALT SURFACE WITH A SURFACE TOLERANCE OF +0 TO -1/4".
2. CONCRETE SHALL BE 3,000 PSI MIN. AT 28 DAYS, WATER/CEMENT RATIO SHALL BE 0.5, 3" MAX. SLUMP AND 3% TO 6% ENTRAINED AIR WITH ONE #4 REBAR HOOP. FIBER-REINFORCED CONCRETE (ADDED PER MANUFACTURER'S RECOMMENDATIONS) MAY BE USED IN LIEU OF #4 REBAR.
3. ALL EDGES WILL BE SEALED WITH CSSI OR APPROVED EQUAL; ALL TOP EDGES WILL BE TACKED AND SAND SEALED.
4. UTILITY FRAMES AND LIDS ARE PREFERRED OUTSIDE OF WHEEL PATH, WHERE POSSIBLE.

SIMILAR TO CITY STD NO. 6-4

CITY OF LEWISTON, IDAHO
PUBLIC WORKS DEPARTMENT

WASTEWATER
CONCRETE
MANHOLE COLLAR

APPROVED FOR PUBLICATION 1/27/15 City Engineer Date — DWG. NO. 5-6

...\5-SanitarySewer\SS MH Collar.dwg

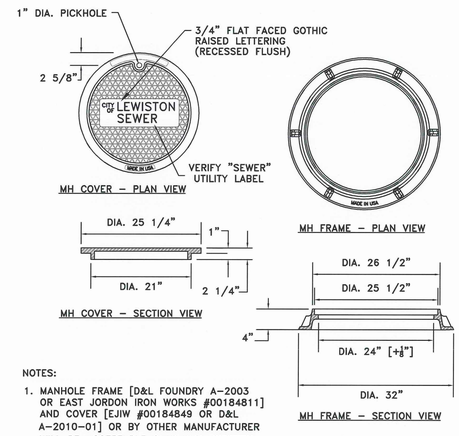

NOTES:

1. MANHOLE FRAME [D&L FOUNDRY A-2003 OR EAST JORDON IRON WORKS #00184811] AND COVER [EJIW #00184849 OR D&L A-2010-01] OR BY OTHER MANUFACTURER WILL BE ACCEPTABLE ONLY WITH WRITTEN APPROVAL FROM PUBLIC WORKS DEPT.; VERIFY "SEWER" UTILITY LABEL LETTERING ON COVER.
2. COVER MATERIAL SPECIFICATION GRAY IRON (ASTM A48 CL35B)
3. IN AREAS OF HIGH STORMWATER INFILTATION, LIDS SHALL HAVE GASKETED AND BOLTED.

CITY OF LEWISTON, IDAHO
PUBLIC WORKS DEPARTMENT

WASTEWATER
MANHOLE FRAME
AND COVER

APPROVED FOR PUBLICATION 11/1/10 City Engineer Date — DWG. NO. 5-7

\Standards\2010-Standards\5-SanitarySewer\MH Frame_Cover.dwg

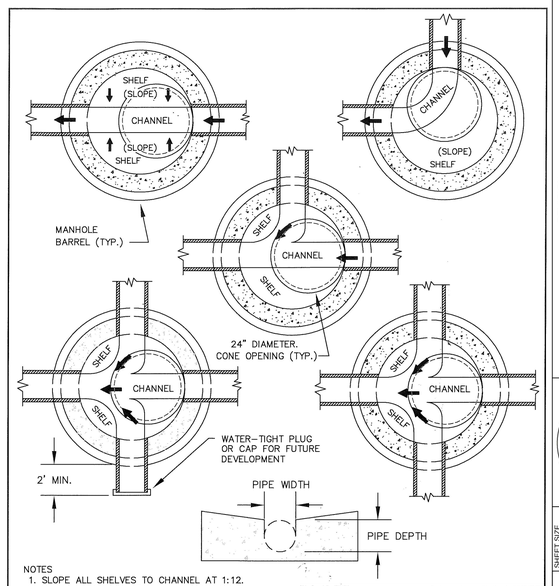

NOTES

1. SLOPE ALL SHELVES TO CHANNEL AT 1:12.
2. SEE PLAN & PROFILE SHEETS FOR SLOPE OF CHANNEL.
3. FOR PIPES OF DIFFERENT SIZES, THE TOP OF PIPE (CROWN) SHALL BE AT THE SAME ELEVATION.
4. OFFSET CONE 24" DIAMETER OPENING CENTERED OVER UPSTREAM PIPE INVERT.

CITY OF LEWISTON, IDAHO
PUBLIC WORKS DEPARTMENT

WASTEWATER
MANHOLE CHANNEL
DETAIL

APPROVED FOR PUBLICATION 9-22-15 City Engineer Date — DWG. NO. 5-8

...\5-SanitarySewer\Channel Detail.dwg

GENERAL NOTES FOR STORMWATER SYSTEMS

1. ALL WORK SHALL CONFORM TO CURRENT 'IDAHO STANDARDS FOR PUBLIC WORKS CONSTRUCTION' (ISPWC) SPECIFICATIONS AND THE CITY OF LEWISTON STANDARDS AND SPECIFICATIONS. IN THE CASE OF CONFLICT, CITY STANDARDS SHALL PREVAIL. THE 'LEWISTON STORMWATER POLICY AND DESIGN MANUAL' DEFINES THE POLICIES, MINIMUM STANDARDS, REQUIREMENTS, AND PROCEDURES FOR THE DESIGN, CONSTRUCTION, AND MAINTENANCE OF PRIVATE STORMWATER SYSTEMS.
2. ANY REPAIR, MAINTENANCE OR ALTERATION OF A PUBLIC STORM LINE OR DRAINAGE MUST BE APPROVED BY CITY ENGINEER.
3. THE CONTRACTOR MUST SECURE APPROVAL FROM THE CITY ENGINEER PRIOR TO ADDING OR REMOVING FILL BACKFILL OVER PUBLIC STORM DRAIN MAINLINE.
4. THE ENGINEERING INSPECTOR SHALL BE NOTIFIED AT LEAST FORTY-EIGHT (48) HOURS PRIOR TO COMMENCING WORK ON STORM DRAINS.
5. ALL PUBLIC STORM DRAIN LINES SHALL BE VIDEOTAPED AND SUBMITTED TO THE PUBLIC WORKS DEPARTMENT [AS PER PUBLIC WORKS POLICY NO. 2012-2] AND APPROVAL PRIOR TO PAVING. CITY SHALL HAVE FOURTY-EIGHT (48) HOURS FOR REVIEW.
6. ALL MANHOLES AND CATCH BASINS SHALL BE INSPECTED TWICE BY THE ENGINEERING INSPECTOR – ONCE PRIOR TO BACKFILL AND THEN PRIOR TO ACCEPTANCE OF IMPROVEMENTS. CALL PWD MAIN OFFICE (208) 746-1316 FOR INSPECTION SCHEDULING.
7. CLOSED CONDUITS (OR PIPELINES) FOR STORMWATER CONVEYANCE IN THE CITY'S STORMWATER SYSTEM MUST BE A MINIMUM OF 12 INCH DIAMETER. THE PIPE MATERIAL MAY BE PLASTIC, STEEL, REINFORCED CONCRETE OR AN APPROVED MATERIAL.
8. MINIMUM PIPE SLOPE SHALL BE 0.5% AND MINIMUM DESIGN VELOCITY WHEN FLOWING FULL SHALL BE NOT LESS THAN 2 FEET PER SECOND AND MAXIMUM VELOCITY SHOULD NOT BE MORE THAN 8 FEET PER SECOND.
9. JUNCTIONS OF 3 OR MORE PIPES, CHANGES IN ALIGNMENT, SLOPE AND/OR CHANGES IN PIPE DIAMETER SHALL BE MADE ONLY AT CATCH BASINS OR MANHOLES.
10. STEEP SLOPE INSTALLATION SHALL BE INSTALLED AS PER MANUFACTURES PIPE SPECIFICATIONS.
11. MANHOLE SHALL BE INSTALLED AT THE END OF EACH LINE, AT ALL CHANGE IN SIZE OR ALIGNMENT, AT DISTANCE NOT GREATER THAN 400 FEET OR AT CITY ENGINEER'S REQUIRED SPACING. ALL OTHER CHANGES IS SPACING MUST HAVE WRITTEN APPROVAL FROM PUBLIC WORKS DEPARTMENT.
12. LOCATING WIRE SHALL BE INSTALLED WITH ALL PUBLIC STORM PIPE INSTALLATIONS. SEE CITY DWG 1-8, 'IDENTIFYING TAPE DETAIL'.
13. CATCH BASINS AND MANHOLES SHALL BE ACCESSIBLE TO VEHICLES AND EQUIPMENT FOR MAINTENANCE AND BE WITHIN RIGHT-OF-WAY OF A MINIMUM EASEMENT WIDTH OF 20 FEET. PROPOSED ACCESS ROUTE MUST BE APPROVED BY CITY ENGINEER. MAINTENANCE ACCESS ROUTES THAT DO NOT FOLLOW THE STORMLINE' MUST HAVE A MINIMUM 12' EASEMENT.

CITY OF LEWISTON, IDAHO
PUBLIC WORKS DEPARTMENT

STORMWATER SYSTEM
GENERAL NOTES

APPROVED FOR PUBLICATION 11/21/16 City Engineer Date — DWG. NO. 6-1

\Standards Dwgs - City\Current Stds\6-StormSewer\General_Notes_stm.dwg

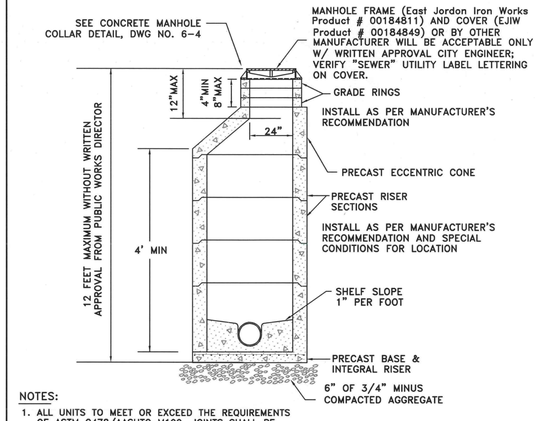

NOTES:

1. ALL UNITS TO MEET OR EXCEED THE REQUIREMENTS OF ASTM C478/AASHTO M199. JOINTS SHALL BE RUBBER GASKET CONFORMING TO ASTM C443 AND SHALL BE GROUTED FROM THE INSIDE. LIFT HOLES BE GROUTED FROM THE OUTSIDE AND INSIDE OF THE MANHOLE.
2. PRECAST BASES SHALL BE FURNISHED WITH CUTOUTS OR KNOCKOUTS. KNOCKOUTS SHALL HAVE A WALL THICKNESS OF 2" MINIMUM
3. CONNECTION TO MANHOLE SHALL BE MADE USING RESILIENT CONNECTOR CONFORMING TO ASTM C-923 SUCH AS KOR-N-SEAL, A-LOK OR APPROVED EQUAL. HAVE A WALL THICKNESS OF 2" MINIMUM
4. USE A MINIMUM OF 1/2" OF NON-SHRINK GROUT BETWEEN RISERS, CONE AND FRAME.
5. RISERS, UNIT SECTIONS AND THE FRAME SHALL NOT BE MORE THAN ONE INCH OUT OF ALIGNMENT WITH THE MANHOLE BASE; PIPES SHALL BE FLUSH WITH INSIDE EDGE OF MANHOLE.
6. SEE DWG NO 6-4 FOR CONCRETE MANHOLE COLLAR.

CITY OF LEWISTON, IDAHO
PUBLIC WORKS DEPARTMENT

STORMWATER
TYPE 1 MANHOLE

APPROVED FOR PUBLICATION 12/13/10 City Engineer Date — DWG. NO. 6-2

\Standards\2010-Standards\6-StormSewer\MH Type 1.dwg

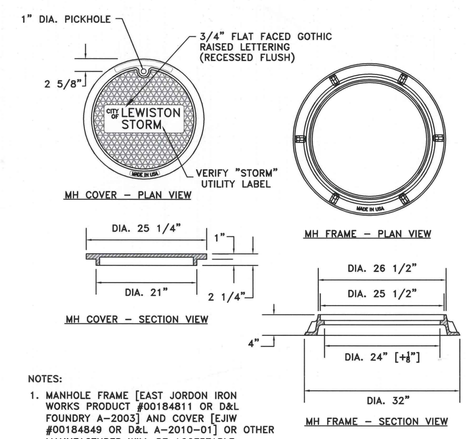

NOTES:

1. MANHOLE FRAME [EAST JORDON IRON WORKS PRODUCT #00184811 OR D&L FOUNDRY A-2003] AND COVER [EJIW #00184849 OR D&L A-2010-01] OR OTHER MANUFACTURER WILL BE ACCEPTABLE ONLY WITH WRITTEN APPROVAL FROM PUBLIC WORKS DEPT.; VERIFY "STORM" UTILITY LABEL LETTERING ON COVER.
2. COVER MATERIAL SPECIFICATION GRAY IRON (ASTM A48 CL35B)

CITY OF LEWISTON, IDAHO
PUBLIC WORKS DEPARTMENT

STORMWATER
MANHOLE FRAME
AND COVER

APPROVED FOR PUBLICATION 12/13/10 City Engineer Date — DWG. NO. 6-5

\Standards\2010-Standards\6-StormSewer\MH Frame_Cover.dwg

GENERAL NOTES FOR CATCH BASINS

1. ALL UNITS TO MEET OR EXCEED THE REQUIREMENTS OF ASTM C478/AASHTO M199.
2. ALL CURB INLET STRUCTURES SHALL HAVE A MINIMUM 12" SUMP WITH THREE 1 1/2" DIA. WEEP HOLES IN BASE AND MINIMUM OF 12" OF COMPACTED 5/8" MINUS UNDER BASE; CRUSHED AGGREGATE MATERIAL COMPACTED TO 95% MODIFIED PROCTOR AS PER AASHTO T180
3. A CATCH BASIN SHALL BE INSTALLED UPHILL TO EACH INTERSECTION CORNER RADIUS AND SPACED NO MORE THAN 400 FEET ALONG THE LENGTH OF THE STREET OR AT CITY ENGINEER'S REQUIRED SPACING. . ADJUSTMENTS TO SPACING SHALL REQUIRE CALCULATIONS TO VERIFY THE CHANGES HAVE MET CITY SPECIFICATIONS.
4. PRECAST BASES SHALL BE FURNISHED WITH CUTOUTS OR KNOCKOUTS. KNOCKOUTS SHALL HAVE A WALL THICKNESS OF 2" MINIMUM.
5. ALL PIPES SHALL BE FLUSH WITH BASIN WALL AND SHALL BE MORTARED ALL AROUND.
6. USE CITY STD DWG NO. 6-7 FOR CATCH BASIN FRAME AND GRATE.
7. REDUCTION SLAB, RISERS, AND FRAME & GRATE SHALL NOT BE MORE THAN ONE INCH OUT OF VERTICAL ALIGNMENT WITH CATCH BASIN BASE.
8. MAXIMUM DEPTH FROM FINISHED GRADE TO PIPE INVERT IS 5 FEET.
9. USE A MINIMUM OF 1/2" NON-SHRINK GROUT BETWEEN RISERS, BASE, AND FRAME.
10. CURB INLET TO BE PLACED WITHIN A TOLERANCE OF 1/2" HORIZONTAL ALIGNMENT FROM CURB LINE.
11. SET GRATE 1" LOWER THAN PROPOSED FLOWLINE TO ENSURE POSITIVE DRAINAGE INTO CATCH BASIN. CURB FLOWLINE SHALL BE TRANSITION TO 3' ON EACH SIDE OF THE CATCH BASIN TO ADJUST FOR 1" DROP. GUTTER LIP AND TOP OF CURB ARE NOT TO BE DEPRESSED.

CITY OF LEWISTON, IDAHO
PUBLIC WORKS DEPARTMENT

STORMWATER
GENERAL CATCH BASIN
NOTES

APPROVED FOR PUBLICATION 12/13/10 City Engineer Date — DWG. NO. 6-6

M:\Standards\2010-Standards\6-StormSewer\CB General-Notes.dwg

REV NO.	DATE	REVISION DESCRIPTION	CHECKED	APPD.

REGISTERED PROFESSIONAL ENGINEER, LAND SURVEYOR, OWNER OF #21102 STATE OF IDAHO

SCALE	SHEET SIZE D	CHECKED BY JSH	JOB # 1712	DRAWING # 1712-C8.2
	DRAWN BY MEE	DATE 12-21-17	SHEET C8.2	

AVIATION DREAMS/OPPORTUNITIES DEVELOPMENT
LEWISTON - NEZ PERCE COUNTY REGIONAL AIRPORT
STANDARD DRAWINGS
LEWISTON, IDAHO

HEDCO
HAMMOND ENGINEERING & DEVELOPMENT CO.
528 BRYDEN AVENUE LEWISTON, IDAHO 83501
(208) 798-5422

SHEET C8.2

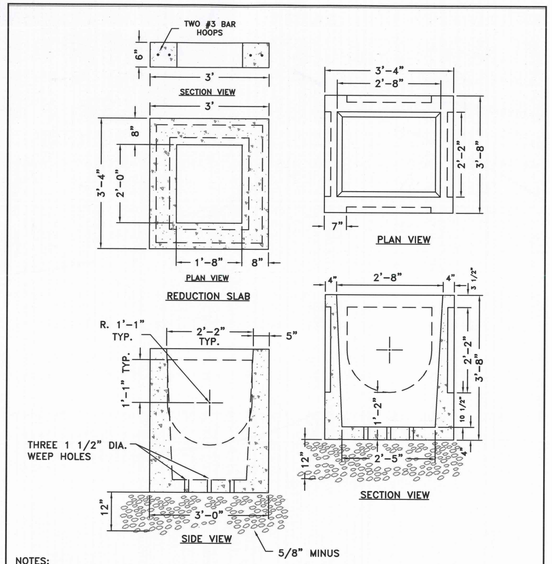

NOTES:

1. SHALLOW CATCH BASIN [WILBERT PRECAST PRODUCT #1845] AND REDUCTION SLAB [WILBERT PRECAST #1846] OR BY OTHER MANUFACTURER WILL BE ACCEPTABLE ONLY WITH WRITTEN APPROVAL FROM PUBLIC WORKS DEPT.
2. SEE CITY DWG 6-6 'GENERAL NOTES FOR CATCH BASINS'.

M:\Standards\2010-Standards\6-StormSewer\CB Shallow.dwg

CITY OF LEWISTON, IDAHO
PUBLIC WORKS DEPARTMENT

STORMWATER
TYPE 1A CATCH BASIN
AND REDUCTION SLAB

APPROVED FOR PUBLICATION
City Engineer — Date 12/13/10

DWG. NO. 6-9

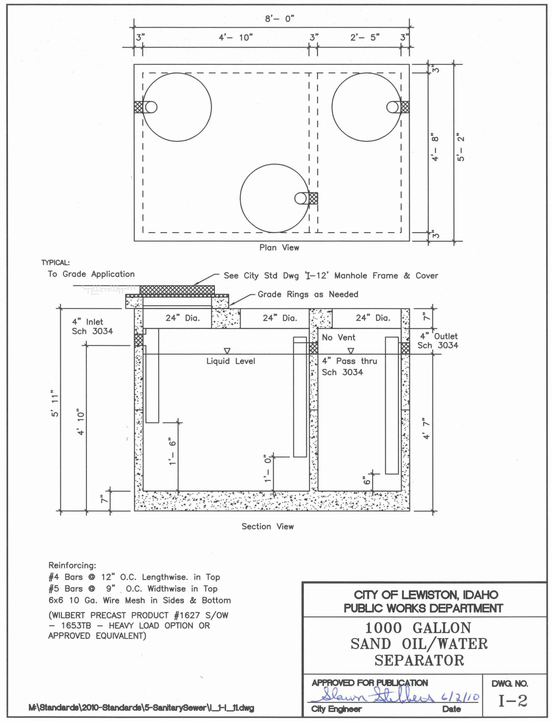

Reinforcing:
#4 Bars @ 12" O.C. Lengthwise. in Top
#5 Bars @ 9" O.C. Widthwise in Top
6x6 10 Ga. Wire Mesh in Sides & Bottom

(WILBERT PRECAST PRODUCT #1627 S/OW – 1653TB – HEAVY LOAD OPTION OR APPROVED EQUIVALENT)

M:\Standards\2010-Standards\5-SanitarySewer\I_1-I_11.dwg

CITY OF LEWISTON, IDAHO
PUBLIC WORKS DEPARTMENT

1000 GALLON
SAND OIL/WATER
SEPARATOR

APPROVED FOR PUBLICATION
City Engineer — Date 6/2/10

DWG. NO. I-2

REV NO.	DATE	REVISION DESCRIPTION	CHECKED	APPD.

REGISTERED PROFESSIONAL ENGINEER #21102 STATE OF IDAHO LAND SURVEYOR

SCALE	SHEET SIZE D
DRAWN BY MEE	CHECKED BY JSH
DATE 12-21-17	JOB # 1712
SHEET C8.3	
DRAWING # 1712-C8.3	

AVIATION DREAMS/ OPPORTUNITIES DEVELOPMENT
LEWISTON - NEZ PERCE COUNTY REGIONAL AIRPORT
STANDARD DRAWINGS
LEWISTON, IDAHO

HEDCO
HAMMOND ENGINEERING & DEVELOPMENT CO.
528 BRYDEN AVENUE LEWISTON, IDAHO 83501
(208) 798-5422

SHEET
C8.3