THE ESTATES AT CANYON CREST - PHASE III/ PROJECT IIIA

CIVIL CONSTRUCTION PLANS

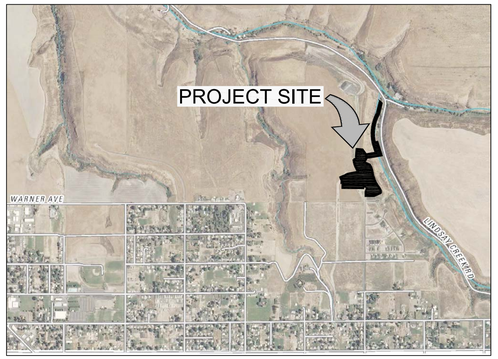

CONTACTS

OWNER

RPL DEVELOPMENT CO., INC.
P.O. BOX 499
Lewiston, ID 83501

GEOTECHNICAL SERVICES

ALLWEST TESTING & ENGINEERING, LLC
2705 E. MAIN STREET
LEWISTON, IDAHO

UTILITY PROVIDERS

SANITARY SEWER	CITY OF LEWISTON (Bryan Lacy)	208-743-1316
WATER	L.O.I.D.	208-746-8235
POWER	AVISTA (Colby Witters)	509-780-1475
TELECOM.	CENTURY LINK (Julio Mendez)	208-798-8380
CABLE T.V.	CABLEONE (Tom Donahue)	208-791-5032

811 Know what's below. Call before you dig.

LEGEND

—San— —San—	PROPOSED SAN. SEWER	—San— —San—	EXISTING SAN. SEWER
—SD— —SD—	PROPOSED STORM SEWER	—SD— —SD—	EXISTING STORM SEWER
—W— —W— —W—	PROPOSED WATER LINE	—W— —W— —W—	EXISTING WATER LINE
—F— —F— —F—	PROPOSED FIRE PROTECTION	—F— —F— —F—	EXISTING FIRE PROTECTION
	PROPOSED FENCE LINE	—OHE— —OHE—	EXISTING OVERHEAD ELECTRICAL LINE
	PROPOSED CATCH BASIN	—UGE— —UGE—	EXISTING UNDERGROUND ELECTRICAL LINE
	PROPOSED MANHOLE	—X— —X— —X—	EXISTING FENCE LINE
	PROPOSED WATER METER		EXISTING CATCH BASIN
	PROPOSED GATE VALVE		EXISTING MANHOLE
	PROPOSED FIRE HYDRANT		EXISTING GATE VALVE
	PROPOSED THRUST BLOCK		EXISTING FIRE HYDRANT
XXXX	PROPOSED CONTOUR LINE		EXISTING THRUST BLOCK
XXXX	PROPOSED SPOT ELEVATION		EXISTING WATER METER
	PROPOSED CENTERLINE MONUMENT		EXISTING POWER POLE
	PROPOSED CENTERLINE	XXXX	EXISTING CONTOUR LINE
	PROPOSED EASEMENT LINE	XXXX	EXISTING SPOT ELEVATION
	PROPERTY LINE	(E)XXXXXXX	EXISTING UTILITY
	PROJECT BOUNDARY		EXISTING PROPERTY LINE
	SILT FENCE		EXISTING CENTERLINE MONUMENT

ITEM	MATERIAL	TEST / STANDARD	ACCEPTANCE	TEST FREQUENCY	INSPECTOR.CO.	DATE	INITIAL
1. ALL UTILITY TRENCHES & STRUCTURES							
TRENCH SUBGRADE	Native (6" to 8" Lifts Max.)	Moisture Density Relationship of Soils (AASHTO T 180) In-Place Density and Moisture Content (AASHTO 310 Method B)	90% Max. Dry Density	One in-place density test every lift per 100 linear feet. If project is less than 100 linear feet, one in-place density test per day OR per lift. (whichever test frequency is more restrictive)	Allwest Testing		
PIPE BEDDING	3/4" minus Crushed Aggregate (6" to 8" Max. Lift) (Current ITD Spec 703.04) OR 5/8" minus Crushed Aggregate (6" to 8" Max. Lift) (Current WDOT/M41-10 Spec 9-03.9)	Moisture Density Relationship of Soils (AASHTO T 180) In-Place Density and Moisture Content (AASHTO 310 Method B)	95% Max. Dry Density	One in-place density test every lift per 100 linear feet. If project is less than 100 linear feet, one in-place density test per day OR per lift. (whichever test frequency is more restrictive). Test top 6" of 12" cover	Allwest Testing		
1st FOOT [12"] OF FILL OVER PIPE	3/4" minus Crushed Aggregate (6" to 8" Max. Lift) (Current ITD Spec 703.04) OR 5/8" minus Crushed Aggregate (6" to 8" Max. Lift) (Current WDOT/M41-10 Spec 9-03.9)	Moisture Density Relationship of Soils (AASHTO T 180) In-Place Density and Moisture Content (AASHTO 310 Method B)	95% Max. Dry Density	One in-place density test every lift per 100 linear feet. If project is less than 100 linear feet, one in-place density test per day OR per lift. (whichever test frequency is more restrictive)	Allwest Testing		
TRENCH BACKFILL UNDER PROPOSED ROAD & SIDEWALK	3/4" minus Crushed Aggregate (6" to 8" Max. Lift) (Current ITD Spec 703.04) OR 5/8" minus Crushed Aggregate (6" to 8" Max. Lift) (Current WDOT/M41-10 Spec 9-03.9)	Moisture Density Relationship of Soils (AASHTO T 180) In-Place Density and Moisture Content (AASHTO 310 Method B)	95% Max. Dry Density	One in-place density test every lift per 100 linear feet. If project is less than 100 linear feet, one in-place density test per day OR per lift. (whichever test frequency is more restrictive)	Allwest Testing		
STRUCTURAL FILLS	As Spec'd by Engineer	As Spec'd by Engineer		As Spec'd by Engineer	Allwest Testing		
2. STORM DRAIN MAINS							
GASKETED PE Storm Sewer Pipe	Polyethylene, ADS N-12 or Equal		Certified & Visual by City		Certified & Visual by City		
ALIGNMENT AND GRADE	N/A	Per Manufacturer's Instructions		Per Plan			
JOINTS (Deflection/Proper Pipe Embedment)	N/A	Per Manufacturer's Instructions		Each Joint			
PRESSURE TEST	N/A	4 PSI for 15 Minutes, 1/2 PSI Drop	If required by City Engineer	Between Access Holes			
MANHOLES	Concrete	City Standard		N/A	Certified & Visual by City		
VIDEO INSPECTION	N/A		Public Works Policy No 2012-2				
3. WATER MAINS							
DUCTILE IRON or PVC WATER MAIN	AWWA C-151, C-900, C-905 (Class as Reqd)		Certified & Visual by City		Certified & Visual by L.O.I.D.		
ALIGNMENT AND GRADE	N/A	AWWA C-600, AWWA C-605		Per Plan			
JOINTS (Deflection/Proper Pipe Embedment)	N/A	AWWA C-600, AWWA C-605		Each Joint			
THRUST BLOCKS	Concrete, 2500 PSI Mix	Per Approved Plans/or City Std Dwg # 4-4		Each Joint	Certified & Visual by L.O.I.D.		
HYDROSTATIC PRESSURE	N/A	2 Hrs., NTE Allowable Leakage Per AWWA C-600, AWWA C-605	L.O.I.D.	150% Working Pressure OR 1½ times the Working Pressure in the Water System			
CHLORINATION/BACTERIA	N/A	AWWA C-651	L.O.I.D.	Bacterial Testing: two negative testing samples 24 hours apart	L.O.I.D.		
4. WASTEWATER MAINS							
PVC WASTEWATER MAIN	PVC, SDR 35	ASTM 3034	Cert. & Visual by City	N/A	Cert. & Visual by City		
ALIGNMENT AND GRADE	N/A	N/A		Per Plan			
JOINTS (Deflection/Proper Pipe Embedment)	N/A	Per Manufacturer's Instructions		Each Joint			
MANHOLES	Concrete	Hydrostatic Test	Cert. & Visual by City	Each Joint	Cert. & Visual by City		
PRESSURE TEST	N/A	4 PSI for 15 Minutes, 1/2 PSI Drop		Between Access Holes			
VIDEO INSPECTION	N/A	No Perforations, Dents or Dimples, No Belsies > 0.02'		Between Access Holes	Contractor		
5. CONCRETE CURB, GUTTER & SIDEWALK							
CONCRETE	CLASS 3SB - Approved Mix Design Required with Min Cement Content of 560 Lb/CY, Max Water Cement Ratio of .44, a WRA, and an AEA	AASHTO T-22 Compressive Strength of Concrete AASHTO T-23 Making Test Specimens AASHTO T-119 Slump of Hydraulic Cement Concrete AASHTO T-152 Air Content of Freshly Mixed Concrete AASHTO T-309 Temperature of Freshly Mixed Concrete WAQTC TM-2 Sampling Freshly Mixed Concrete	Min. 28 day Compressive Strength = 3000 psi, Water/Cement Ratio shall be 0.5 lb/lb Max. Slump = 5 inches Air Content Percent = 6.5% ± 1.5 Temperature = 50°F - 80°F	1 of Each Test Minimum per Day, or 1 of Each Test per 50 CY	Allwest Testing		
CRUSHED AGGREGATE BASE COURSE	3/4" minus Crushed Aggregate (4" Max. Lift) (Current ITD Spec 703.04) OR 5/8" minus Crushed Aggregate (4" Max. Lift) (Current WDOT/M41-10 Spec 9-03.9)	Moisture Density Relationship of Soils (AASHTO T 180) In-Place Density and Moisture Content (AASHTO 310 Method B)	95% Max. Dry Density	1 Tests Per 500 LF-Min 2 Tests	Allwest Testing		
ALIGNMENT AND GRADE	N/A	Visual	± 0.02' from Design Grade/Alignment	Per 10' Section	City Approval		
JOINTS/FLATNESS/STRAIGHTNESS	N/A	Visual	± 0.02'/10' Segment	Per 10' Section			
FINISH	N/A	Visual	Floated, Uniform, Light Broom Finish	Entire Surface Area			
6. ASPHALTIC CONCRETE PAVING							
SUPERPAVE HOT MIX ASPHALT	ITD 405 Superpave Class SP2, SP3 and SP5 (2012 ITD Spec 405 and 703.05)	**Class SP2:** AASHTO T-308, Asphalt Content AASHTO T-27 & T-11, Sieve Analysis WAQTC TM-8, In-Place Density of Bituminous Mixes AASHTO T-209, Theoretical Maximum Density (RICE) **Class SP3 and SP5:** AASHTO T-308, Asphalt Content AASHTO T-27 & T-11, Sieve Analysis AASHTO T-166 Method A, Air Voids, and Voids in Mineral Aggregates (VMA) WAQTC TM-8, In-Place Density of Bituminous Mixes AASHTO T-209, Theoretical Maximum Density (RICE)	**ITD Section 405.03** Asphalt Content - CJMF Value +/- 0.3% Sieve Analysis - Table 405.03-5 Air Voids - 4.0 +/- 1.0% Voids in Mineral Aggregates, at N design 703.05 Minimum Value 0.059 Voids Filled with Asphalt - Table 700.05-1 # - 5 In-Place Density - 92-96% of Maximum Theoretical	1 Test Per 750 Ton, Minimum of 1 Test per Project. Random Sample Locations Determined by City Engineer	Allwest Testing		
CRUSHED AGGREGATE BASE COURSE*	Same test requirement as under **5. Concrete Curb, Gutter & Sidewalk**				Allwest Testing		
7. EROSION & SEDIMENT CONTROLS	Per Approved Plan	Per Plan and Manufacturers' Instructions		1/Wk or After Every Rainfall			
8. TRAFFIC CONTROL	Per Approved Plan	Current Adopted MUTCD/ATSSA		Continuous	Contractor		
9. PRIVATE STORMWATER SYSTEM	Per Approved Plan	City Resolution #90-100	Certified & Visual by City	Before Public Improvements Accepted	Certified & Visual by City - Underground Infrastructure elements must be approved by City prior to backfill		
10. RECORD DRAWINGS	AutoCAD Elect File, Bond Paper, 22" x 34" Min Size	City Checklist			HEDCO, Inc.		
11. ENGINEER'S CERTIFICATION					HEDCO, Inc.		
Date Last: Revised September 2016							
HC1035-A							

PUBLIC IMPROVEMENT QUANTITIES

1.	Mobilization	Lump Sum	11a.	8" Gate Valves	7 Each
2.	Project Earthwork (street construction)	Lump Sum	11b.	12" Gate Valves	4 Each
3a.	8" Base Course	6,300 Sq. Yds	12a.	4.5' Conc. Sidewalk	12,000 S.F.
3b.	10" Base Course	3900 Sq. Yds	12b.	Pedestrian Ramps	9 Each
4a.	3" Bituminous Pavement	7,890 Sq. Yds	12c.	Conc. Driveway Approaches	3 Each
4b.	2-1/2" Bituminous Pavement	2,140 Sq. Yds	13.	Utilities Trenching	2200 L.F.
5a.	Conc. Rolled Curb	2,225 L.F.	14.	Utilities Conduit	Lump Sum
5b.	Conc. High Back Curb	1,390 L.F.	15.	Fire Hydrants	4 Each
6.	Catch Basins	10 Each	16.	Water Services (copper piping)	23 Each
7a.	12" HDPE Storm Drain	520 L.F.	17.	Temp. Stormwater Infiltration Basin	Lump Sum
7b.	18" HDPE Storm Drain	920 L.F.	18.	Stormwater Detention Basin & Access Rd.	Lump Sum
7c.	4' Dia. Storm Sewer Manholes	60 V.F.	19.	Traffic Control	Lump Sum
8a.	18" PVC Sanitary Sewer	742 L.F.	20.	Fabricated Bollards	8 Each
8b.	4" Sanitary Sewer Services	840 L.F.	21.	Constr. Stormwater Mangmt.	Lump Sum
9.	4' Dia. San. Sewer MH	20 V.F.			
10a.	8" C900 PVC Water Main	1,640 L.F.			
10b.	12" C900 PVC Water Main	710 L.F.			

AS CONSTRUCTED
HEDCO, Inc.
528 Bryden Ave.
Lewiston, ID 83501

Jack S. Hammond, P.E.
10/30/17

SHEET INDEX

C1	GENERAL NOTES & DETAILS	C14	MAINTENANCE ACCESS ROAD PLAN & PROFILE
C2	EXISTING SITE CONDITIONS	C15	18TH STREET STREET X-SECTIONS
C3	CONSTRUCTION EROSION & SEDIMENT CONTROL PLAN	C16	HIDDEN VALLEY LOOP X-SECTIONS
C4	SITE DEVELOPMENT PLAN	C17	HIDDEN VALLEY LOOP X-SECTIONS
C5	SITE GRADING PLAN	C18	APPALOOSA DRIVE X-SECTIONS
C6	FRANCHISE UTILITIES PLAN	C19	CANYON CREST DRIVE X-SECTIONS
C7	STORMWATER DETENTION BASIN	C20	ALLEY X-SECTIONS
C8	18TH STREET PLAN & PROFILE	C21	MAINTENANCE ACCESS ROAD X-SECTIONS
C9	HIDDEN VALLEY LOOP PLAN & PROFILE	C22	STANDARD DRAWINGS
C10	HIDDEN VALLEY LOOP INTERSECTION	C23	" "
C11	APPALOOSA DRIVE PLAN & PROFILE	C24	" "
C12	CANYON CREST DRIVE PLAN & PROFILE	C25	" "
C13	ALLEY PLAN & PROFILE	C26	" "

REV	DATE	DESCRIPTION	CHECKED	APPD.
A	05-12-17	Reroute Sanitary Interceptor Sewer; Add Lot 7, Block 3 & Lot 1,Block 4		
		revised Hidden Valley Ct. & Ex Run Ct. to be one connected street		
B	05-22-17	Revised as per city review comments dated 4-05-2017		
AB	10-30-17	As-built data		

REGISTERED PROFESSIONAL ENGINEER, LAND SURVEYOR, AND CERTIFIED SUBDIVISION REVIEWER #21102 STATE OF IDAHO JACK SHAMMOND

SCALE	SHEET SIZE D	CHECKED BY JSH
DRAWN BY MEE	JOB # 1650	
DATE 03-03-17	SHEET C0	
DRAWING # 1650-C0		

THE ESTATES AT CANYON CREST - PHASE III/ PROJECT IIIA
COVER SHEET
RPL DEVELOPMENT CO., INC.
LEWISTON, IDAHO

10-30-2017 AS CONSTRUCTED SET

HEDCO
HAMMOND ENGINEERING & DEVELOPMENT CO.
528 BRYDEN AVENUE LEWISTON, IDAHO 83501
(208) 798-5422

SHEET **C0**

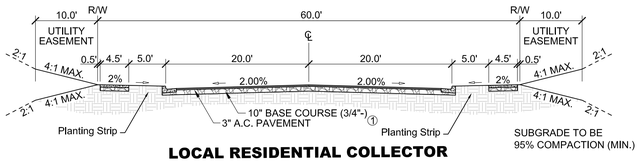

LOCAL RESIDENTIAL COLLECTOR

STD. DWG. NO. 3-9
(18TH STREET)

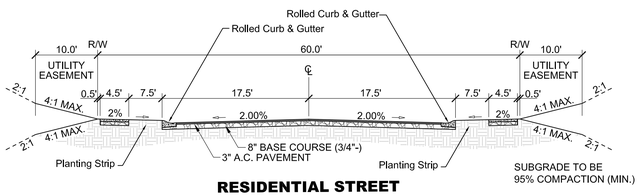

RESIDENTIAL STREET

STD. DWG. NO. 3-4
(APPALOOSA DR, CANYON CREST DR)

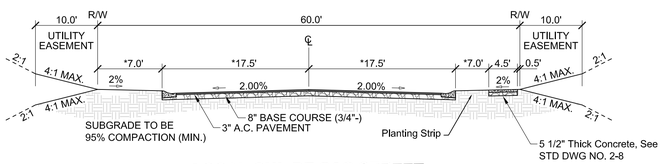

LOCAL CUL-DE-SAC STREET

***MODIFIED STD DWG 3-6**
(HIDDEN VALLEY LOOP, Sta 0+00 - 2+50, 5+50 - End)

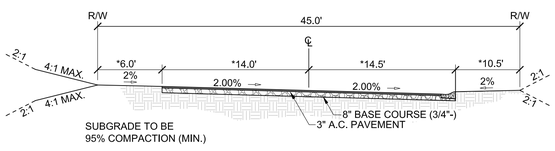

LOCAL CUL-DE-SAC STREET

***MODIFIED STD DWG 3-6**
(HIDDEN VALLEY LOOP, Sta. 2+50 - 5+50)

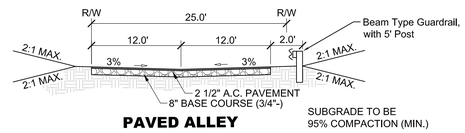

PAVED ALLEY

STD DWG 3-10
(ALLEY)

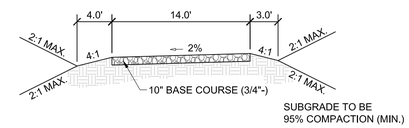

STORMWATER BASIN ACCESS ROAD

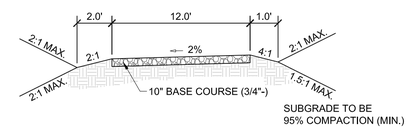

SDMH #A7 ACCESS ROAD

NOTES:

1. ALL EARTHWORK SHALL BE COMPACTED TO 95% OF AASHTO T-99 PROCTOR VALUE.
2. ALL POTABLE WATER LINES RUNNING FROM MAIN TO METERS WILL BE 1" AND METERS WILL BE 3/4" TYP.
3. SANITARY SEWERS SHALL HAVE 3.0' MIN. COVER & SERVICE LATERALS SHALL HAVE 2.0% MIN. GRADE. STORM DRAINS SHALL HAVE 2.0' MIN. COVER
4. ALL PARKING & DRIVEWAY AREAS ARE TO BE PAVED WITH 2.5" A.C. & 8" AGGREGATE BASE ROCK OVER GEOTEXTILE FABRIC.
5. ALL PARKING STALLS ARE TO BE PERMANENTLY MARKED WITH STRIPES AND SIGNS AT THE HANDICAP STALLS, TO LEWISTON CITY STANDARDS.
6. ALL WORK DONE WITHIN CITY RIGHT OF WAY TO BE DONE IN ACCORDANCE WITH CITY STANDARDS.
7. WATER MAIN PIPING, VALVES, FIRE HYDRANTS AND WATER METERS SHALL BE FURNISHED AND INSTALLED IN ACCORDANCE WITH L.O.I.D. STANDARDS.
8. SANITARY SEWER PIPING AND MANHOLES SHALL BE FURNISHED AND INSTALLED IN ACCORDANCE WITH CITY OF LEWISTON STANDARDS.
9. VIDEO INSPECTION OF WASTEWATER & STORMWATER MAINS REQUIRED; SEE PUBLIC WORKS POLICY # 2012-2
10. ALL AVISTA CONDUITS WILL BE SCHEDULE 40 GRAY ELECTRICAL CONDUIT (LARGE SWEEPS, LONG COUPLERS)
11. A RIGHT-OF-WAY PERMIT SHALL BE OBTAINED THROUGH THE PUBLIC WORKS DEPARTMENT PRIOR TO ANY WORK WITHIN PUBLIC RIGHT-OF-WAY.
12. THE CONTRACTOR SHALL BE RESPONSIBLE FOR PROTECTING ALL UNDERGROUND UTILITIES AT ALL TIMES DURING CONSTRUCTION. THE CONTRACTOR SHALL BE RESPONSIBLE FOR REPAIRING ALL DAMAGES AT NO ADDITIONAL COST TO THE OWNER. THE LOCATIONS OF UNDERGROUND UTILITIES SHOWN ON THE PROJECT DRAWINGS ARE APPROXIMATE AND BASED ON EXISTING RECORDS AND FIELD SURVEYS. THE NUMBER AND LOCATIONS OF ALL UNDERGROUND UTILITIES SHOWN ARE FOR INFORMATIONAL PURPOSES ONLY. FOR YOUR SAFETY, STATE LAW REQUIRES THAT THE CONTRACTOR SHALL CALL 811 "CALL BEFORE YOU DIG" FOR UTILITY FIELD LOCATIONS PRIOR TO COMMENCING EXCAVATION ON SITE. THE CONTRACTOR SHALL COORDINATE ALL WORK WITH THE RELEVANT UTILITY COMPANIES
13. SITE DISTANCES FOR ABUTTING PROPERTIES, DRIVEWAYS AND INTERSECTIONS SHALL BE MAINTAINED.
14. ALL CONSTRUCTION NOT SPECIFICALLY MENTIONED OR SHOWN SHALL CONFORM TO CITY ORDINANCES AND STANDARDS AND L.O.I.D. STANDARD DRAWINGS & TECHNICAL SPECS.
15. A SWPPP & NOI IS REQUIRED FOR THIS PROJECT. THE CONTRACTOR SHALL REFERENCE THE STORMWATER POLLUTION PREVENTION MANUAL (SWPPP) FOR ALL EROSION CONTROL PROCEDURES ON SITE.
16. WATER VALVES/BOXES WILL BE LOCATED SUCH THAT NO CONFLICT WILL EXIST WITH STREET CENTERLINE MONUMENTS.
17. SANITARY SEWER FORCE MAIN:
    A. THE FORCE MAIN SHALL BE APPROPRIATELY IDENTIFIED USING TRENCH TAPE SAYING "RAW SEWAGE," "BIOHAZARD," OR OTHER APPROPRIATE WORDING.
    B. LEAKAGE TESTING. LEAKAGE TESTS SHALL CONFORM WITH SECTIONS 401.3.6 AND 505.3.3 OF THE "IDAHO STANDARDS FOR PUBLIC WORKS CONSTRUCTION".
    C. THRUST BLOCKING. THRUST BLOCKING SHALL CONFORM WITH SECTIONS 401.3.4 OF THE "IDAHO STANDARDS FOR PUBLIC WORKS CONSTRUCTION".
    D. ISOLATION VALVES SHALL BE USED IF FORCE MAINS CONNECT INTO A COMMON FORCE MAIN.
    E. COVER. FORCE MAINS SHALL BE COVERED WITH SUFFICIENT EARTH OR OTHER INSULATION TO PREVENT FREEZING OR OTHER PHYSICAL DAMAGE.

FRANCHISE UTILITIES TRENCH DETAIL

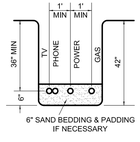

LINE SEPARATIONS

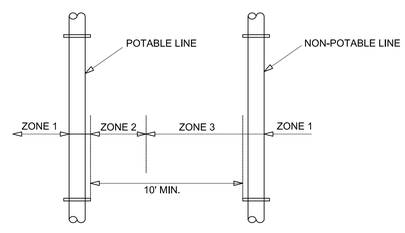

ZONE 1: (MORE THAN 10 FEET APART)

ZONE 2: (FROM 6 TO 10 FEET APART)
* Potable and Non-Potable mains separated by at least 6 feet at outside walls and
* Potable main higher in elevation than Non-Potable mains and
* Non-Potable mains constructed to with Potable water class pipe and pressure tested for water-tightness.

Zone 3 : (CLOSER THAT 6 FEET APART)
* For Mains and Services, Design Engineer to submit data to Department for review and approval that this intuallation will protect public health and environment and non-potable line constructed with potable water class pipe.

LINE CROSSINGS

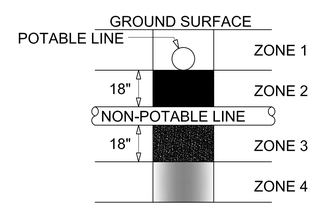

ZONE 1:
A) Potable Water and Non-potable Mains and Service Lines must be separated by at least 18 inches and

B) One full, uncut length of Non-Potable pipe must be centered so that the joints are as far as possible from the crossing.

ZONE 2: Potable line<18" over the top of Non-Potable line (Main and Services).

A) One full, uncut length of Non-Potable Water pipe must be centered on the crossing so that the joints are as far as possible from the Non-Potable line and

either B)

Non-Potable line must be constructed to Potable water pipe standards and pressure tested for water tightness for a horizontal distance of 10 feet on both sides of crossing,

or C)

Non-Potable or potable line must be cased in a larger diameter carrier pipe for a horizontal distance of 10 feet on both sides of the crossing, with no joints.

ZONE 3: Same requirements as Zone 2 except the Non-Potable line must also be supported above the crossing to prevent settling.

ZONE 4: Same requirements as Zone 1 except the Non-potable line must also be supported above the crossing to prevent settling.

Sewage mains shall have at least eighteen inches of clearance from Potable Water mains and Zones 2 and 3 placements are prohibited. Separation requirements also apply to Potable and Non-Potable service lines controlled by the system owner and extending to the property line, service meter, or cleanout. Refer to IDAPA 58.01.08.542.07: Idaho Rules for Public Drinking Water Systems and IDAPA 58.01.16.439.0 Idaho Wastewater Rules.

REV NO	DATE	REVISION DESCRIPTION	CHECKED	APPD.
A	05-12-17	Added Street Std. Section		
B	05-22-17	Revised as per city review comments dated 4-20-2017		

REGISTERED PROFESSIONAL ENGINEER, LAND SURVEYOR, AND CERTIFIED STATE OF IDAHO JOHN SHAMMO #21021 05/22/17

SCALE	SHEET SIZE D	CHECKED BY JSH	JOB # 1650
DRAWN BY MEE	DATE 03-03-17	SHEET C1	DRAWING # 1650-C1

THE ESTATES AT CANYON CREST - PHASE III/ PROJECT IIIA
GENERAL NOTES AND DETAILS
RPL DEVELOPMENT CO., INC.
LEWISTON, IDAHO

HEDCO
HAMMOND ENGINEERING & DEVELOPMENT CO.
528 BRYDEN AVENUE LEWISTON, IDAHO 83501
(208) 798-5422

SHEET **C1**

REV NO	DATE	REVISION DESCRIPTION	CHECKED	APPD.

ENGINEER, LAND SURVEYOR, INC. REGISTERED PROFESSIONAL #21102 STATE OF IDAHO JOHN SHAMMO

SCALE	1"=40'
SHEET SIZE	D
DRAWN BY	MEE
CHECKED BY	JSH
DATE	03-03-17
JOB #	1650
SHEET	C2
DRAWING #	1650-C2

THE ESTATES AT CANYON CREST - PHASE III/ PROJECT IIIA
EXISTING SITE CONDITIONS
RPL DEVELOPMENT CO., INC.
LEWISTON, IDAHO

HEDCO
HAMMOND ENGINEERING & DEVELOPMENT CO.
528 BRYDEN AVENUE LEWISTON, IDAHO 83501
(208) 798-5422

SHEET
C2

NOTES

1. SEDIMENTATION AND EROSION CONTROL MEASURES MUST BE INSPECTED BY QUALIFIED PERSONNEL. INSPECTIONS SHALL BE CONDUCTED AT LEAST ONCE EVERY 14-CALENDAR DAYS AND WITHIN 24 HOURS AFTER A STORM EVENT OF 0.5 INCHES OR GREATER. AN INSPECTION REPORT SHALL BE COMPLETED FOR EACH INSPECTION. ALL INSPECTIONS AND THE INSPECTION REPORT SHALL BE IN ACCORDANCE WITH THE STORM WATER POLLUTION PREVENTION PLAN.
2. EROSION AND DUST CONTROL MEASURES MUST BE USED DURING CONSTRUCTION TO REDUCE OR ELIMINATE BLOWING DUST, EXCESSIVE RUNOFF AND SOIL EROSION ACROSS PROPERTY LINES AND INTO STREETS AND RIGHT-OF-WAY, AND TO ELIMINATE TRACKING OF SOIL AND MUD ONTO STREETS FROM CONSTRUCTION EQUIPMENT AND VEHICLES. THE CONTRACTOR IS RESPONSIBLE FOR STREET CLEANUP AT THE END OF EACH SHIFT.
3. SEE PROJECT SPECIFICATIONS FOR ADDITIONAL GUIDELINES
4. A SWPPP & NOI IS REQUIRED FOR THIS PROJECT. THE CONTRACTOR SHALL REFERENCE THE STORMWATER POLLUTION PREVENTION MANUAL (SWPPP) FOR ALL EROSION CONTROL PROCEDURES ON SITE.

CATCH BASIN SILT BAG

NTS

*Install silt bags in existing and new catch basins. Leave in place until all construction activities have ceased.

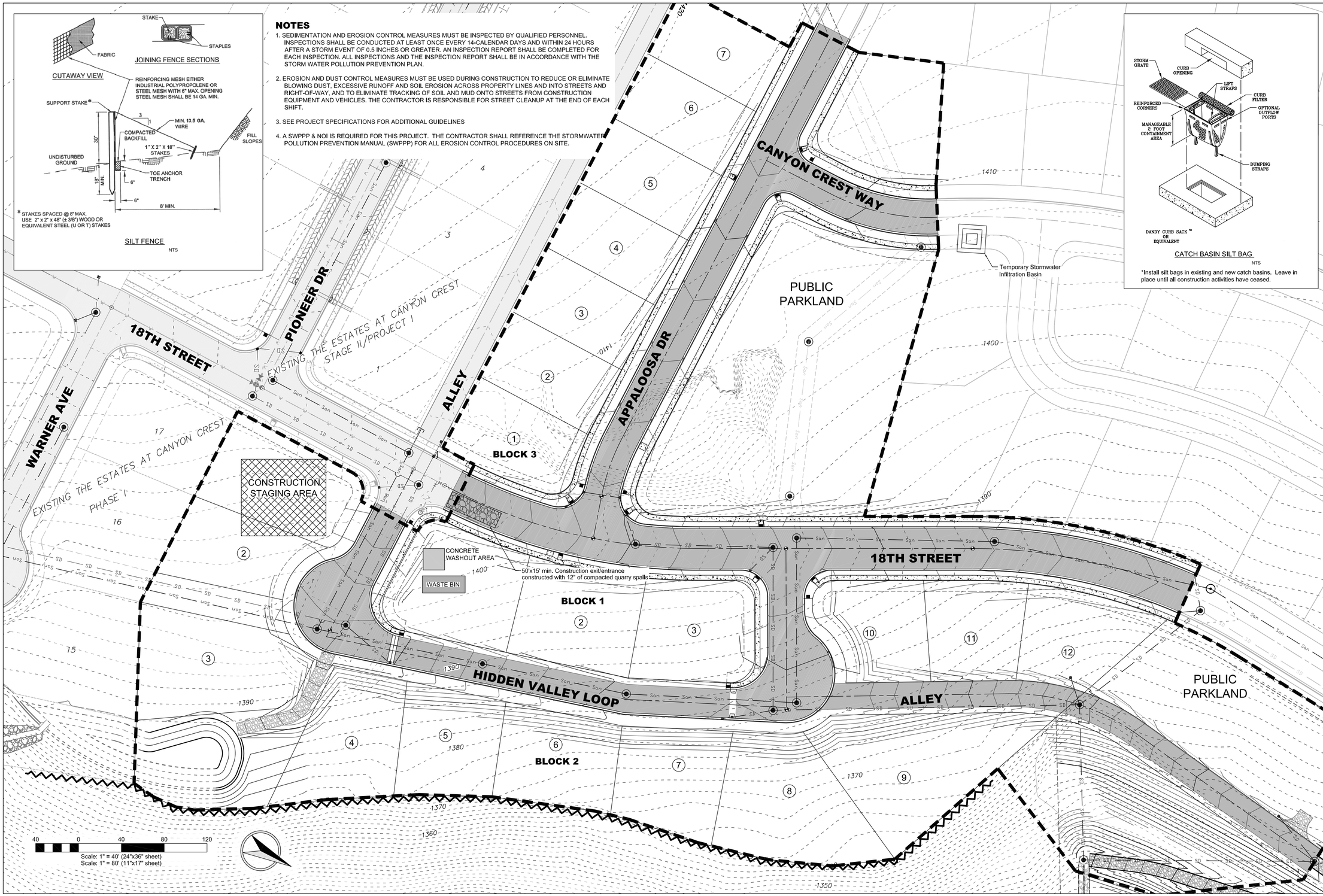

REV NO	DATE	REVISION DESCRIPTION	CHECKED	APPD.

REGISTERED PROFESSIONAL ENGINEER, LAND SURVEYOR, AND OFFICIAL WATER RIGHTS EXPERT OF STATE OF IDAHO #21021 JOHN SHAMMEN 3/3/17

SCALE	1"=40'
DRAWN BY	MEE
DATE	03-03-17
SHEET	C3
DRAWING #	1650-C3
SHEET SIZE	D
CHECKED BY	JSH
JOB #	1650

THE ESTATES AT CANYON CREST - PHASE III/ PROJECT IIIA
CONSTRUCTION EROSION & SEDIMENT CONTROL PLAN
RPL DEVELOPMENT CO., INC.
LEWISTON, IDAHO

HEDCO
HAMMOND ENGINEERING & DEVELOPMENT CO.
528 BRYDEN AVENUE, LEWISTON, IDAHO 83501
(208) 798-5422

SHEET **C3**

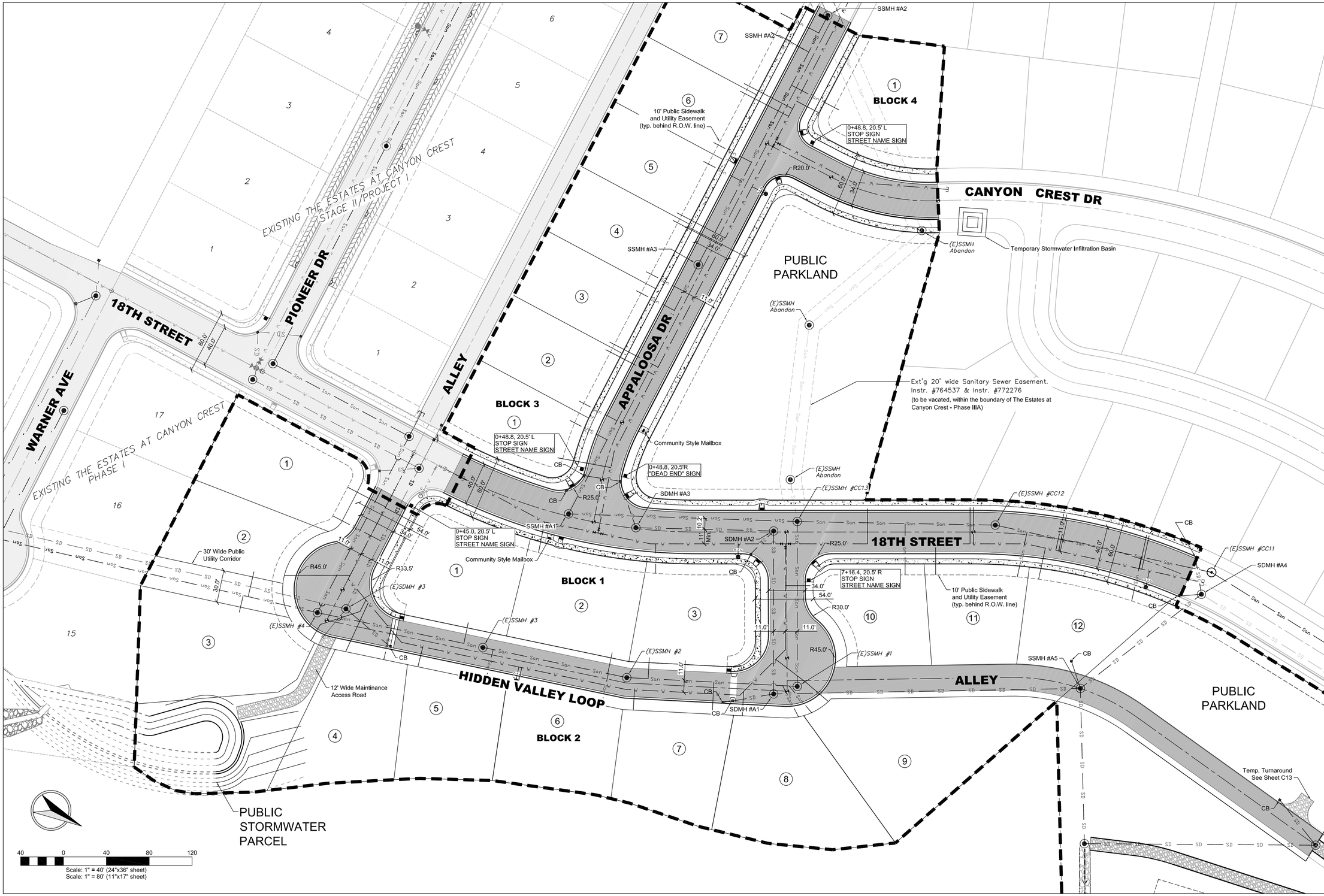

REV NO	DATE	REVISION DESCRIPTION	CHECKED	APPD.
B	05-22-17	Revised as per city review comments dated 4-05-2017		
A	10-30-17	As-built data		

REGISTERED PROFESSIONAL ENGINEER, LAND SURVEYOR, AND CERTIFIED STATE OF IDAHO JOHN SHAMMEN #21102

SCALE 1"=40'	SHEET SIZE D	CHECKED BY JSH	
DRAWN BY MEE		JOB # 1650	
DATE 03-03-17			
SHEET C4			
DRAWING # 1650-C4			

THE ESTATES AT CANYON CREST - PHASE III/ PROJECT IIIA
SITE DEVELOPMENT PLAN
RPL DEVELOPMENT CO., INC.
LEWISTON, IDAHO

HEDCO
HAMMOND ENGINEERING & DEVELOPMENT CO.
528 BRYDEN AVENUE LEWISTON, IDAHO 83501
(208) 799-5422

SHEET **C4**

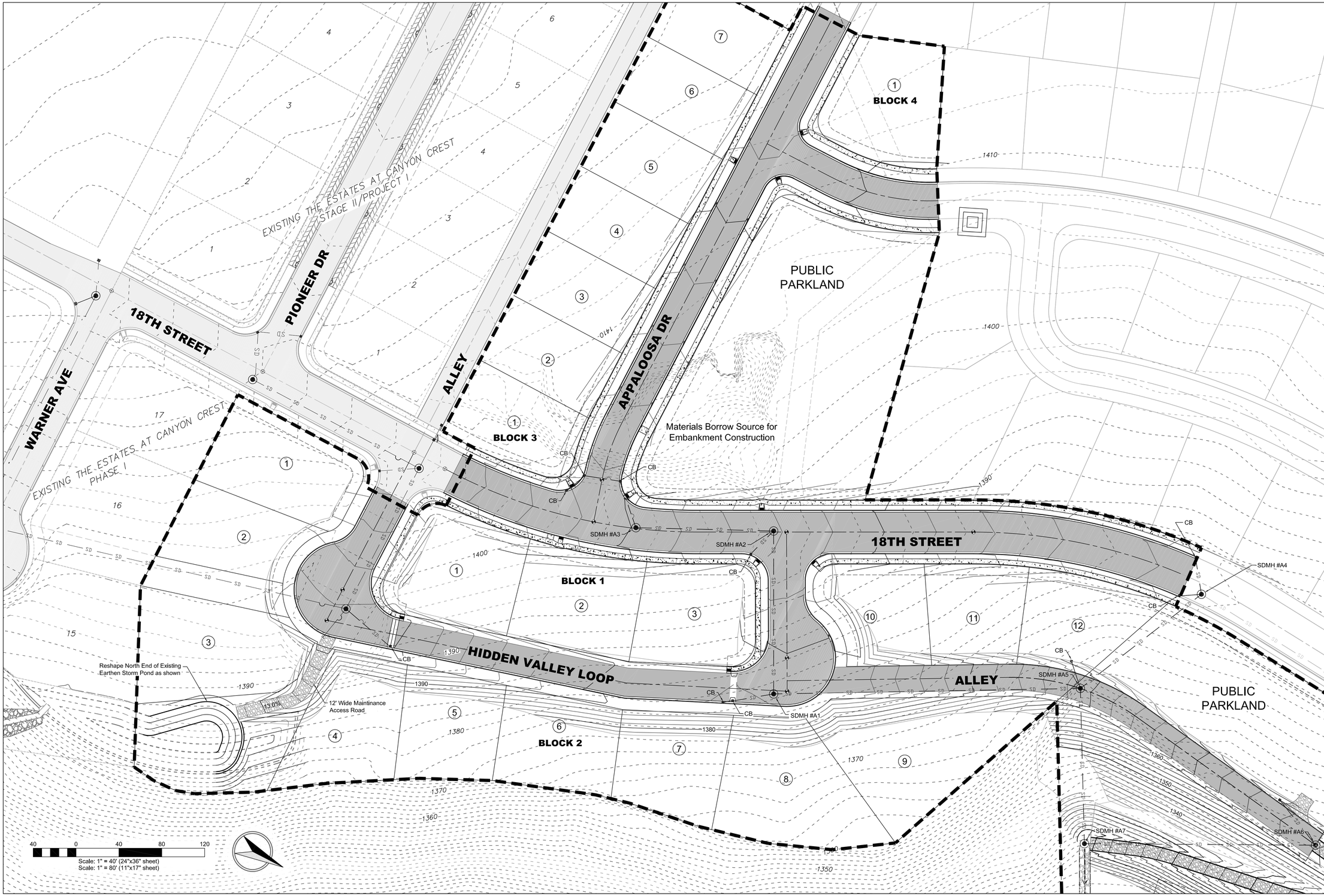

REV NO	DATE	REVISION DESCRIPTION	CHECKED	APPD.
B	05-22-17	Revised as per city review comments dated 4-05-2017		
AB	10-30-17	As-built data		

REGISTERED PROFESSIONAL ENGINEER, LAND SURVEYOR, AND CERTIFIED STATE OF IDAHO #21102 JACK SHAMMEN

SCALE	1"=40'
SHEET SIZE	D
DRAWN BY	MEE
CHECKED BY	JSH
DATE	03-03-17
JOB #	1650
SHEET	C5
DRAWING #	1650-C5

THE ESTATES AT CANYON CREST - PHASE III/ PROJECT IIIA
SITE GRADING PLAN
RPL DEVELOPMENT CO., INC.
LEWISTON, IDAHO

HEDCO
HAMMOND ENGINEERING & DEVELOPMENT CO.
528 BRYDEN AVENUE LEWISTON, IDAHO 83501
(208) 798-5422

SHEET **C5**

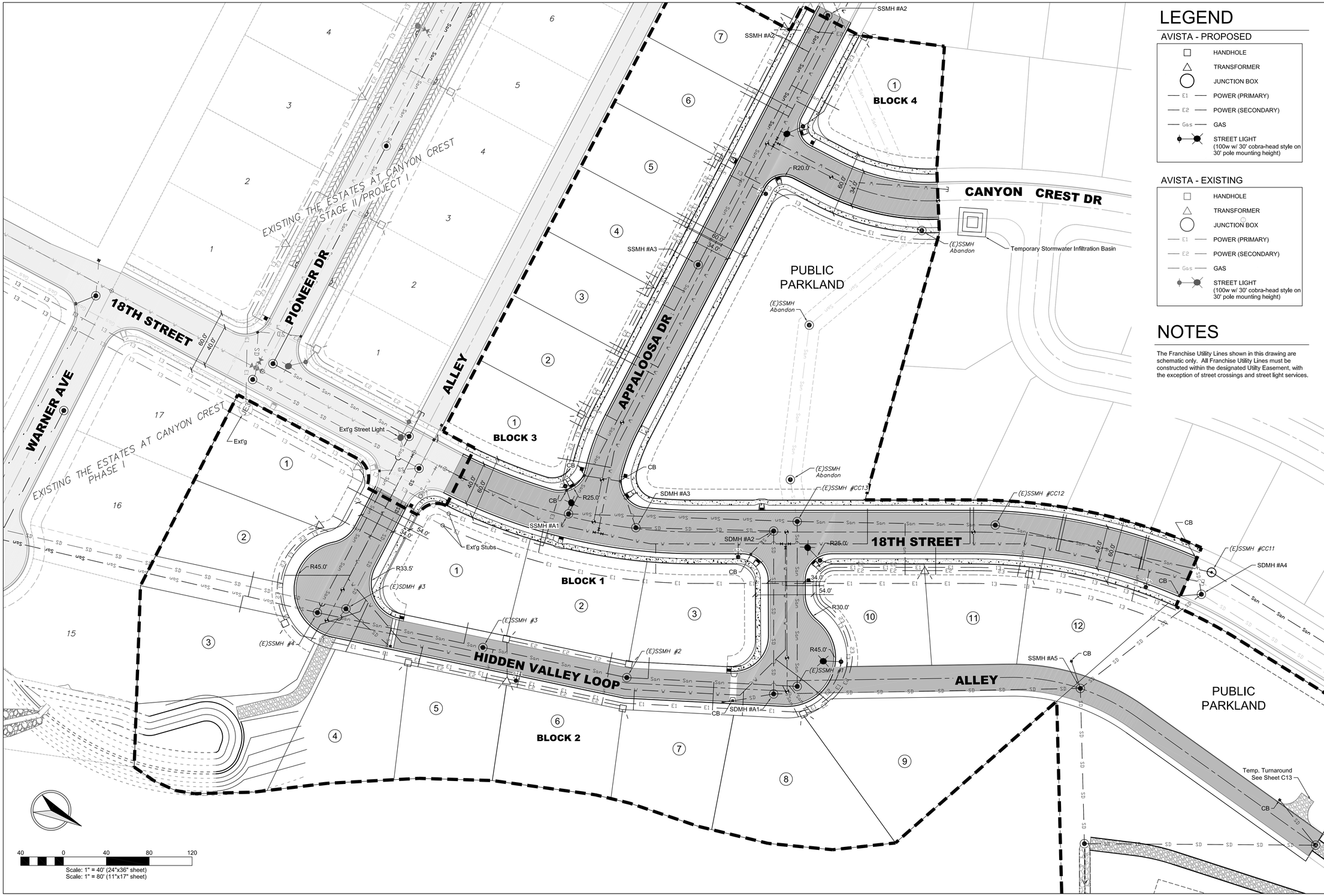

LEGEND

AVISTA - PROPOSED

- HANDHOLE
- TRANSFORMER
- JUNCTION BOX
- E1 — POWER (PRIMARY)
- E2 — POWER (SECONDARY)
- Gas — GAS
- STREET LIGHT (100w w/ 30' cobra-head style on 30' pole mounting height)

AVISTA - EXISTING

- HANDHOLE
- TRANSFORMER
- JUNCTION BOX
- E1 — POWER (PRIMARY)
- E2 — POWER (SECONDARY)
- Gas — GAS
- STREET LIGHT (100w w/ 30' cobra-head style on 30' pole mounting height)

NOTES

The Franchise Utility Lines shown in this drawing are schematic only. All Franchise Utility Lines must be constructed within the designated Utility Easement, with the exception of street crossings and street light services.

REV NO	DATE	REVISION DESCRIPTION	CHECKED	APPD.
AB	10-30-17	As-built data		

REGISTERED PROFESSIONAL ENGINEER, LAND SURVEYOR, AND PROFESSIONAL LANDSCAPE ARCHITECT #2102 STATE OF IDAHO JOHN SHAMMEN 3/3/17

SCALE 1"=40'	SHEET SIZE D	CHECKED BY JSH	
DRAWN BY MEE		JOB # 1650	
DATE 03-03-17		SHEET C6	
DRAWING # 1650-C6			

THE ESTATES AT CANYON CREST - PHASE III/ PROJECT IIIA
FRANCHISE UTILITIES PLAN
RPL DEVELOPMENT CO., INC.
LEWISTON, IDAHO

HEDCO
HAMMOND ENGINEERING & DEVELOPMENT CO.
528 BRYDEN AVENUE LEWISTON, IDAHO 83501
(208) 798-5422

SHEET **C6**

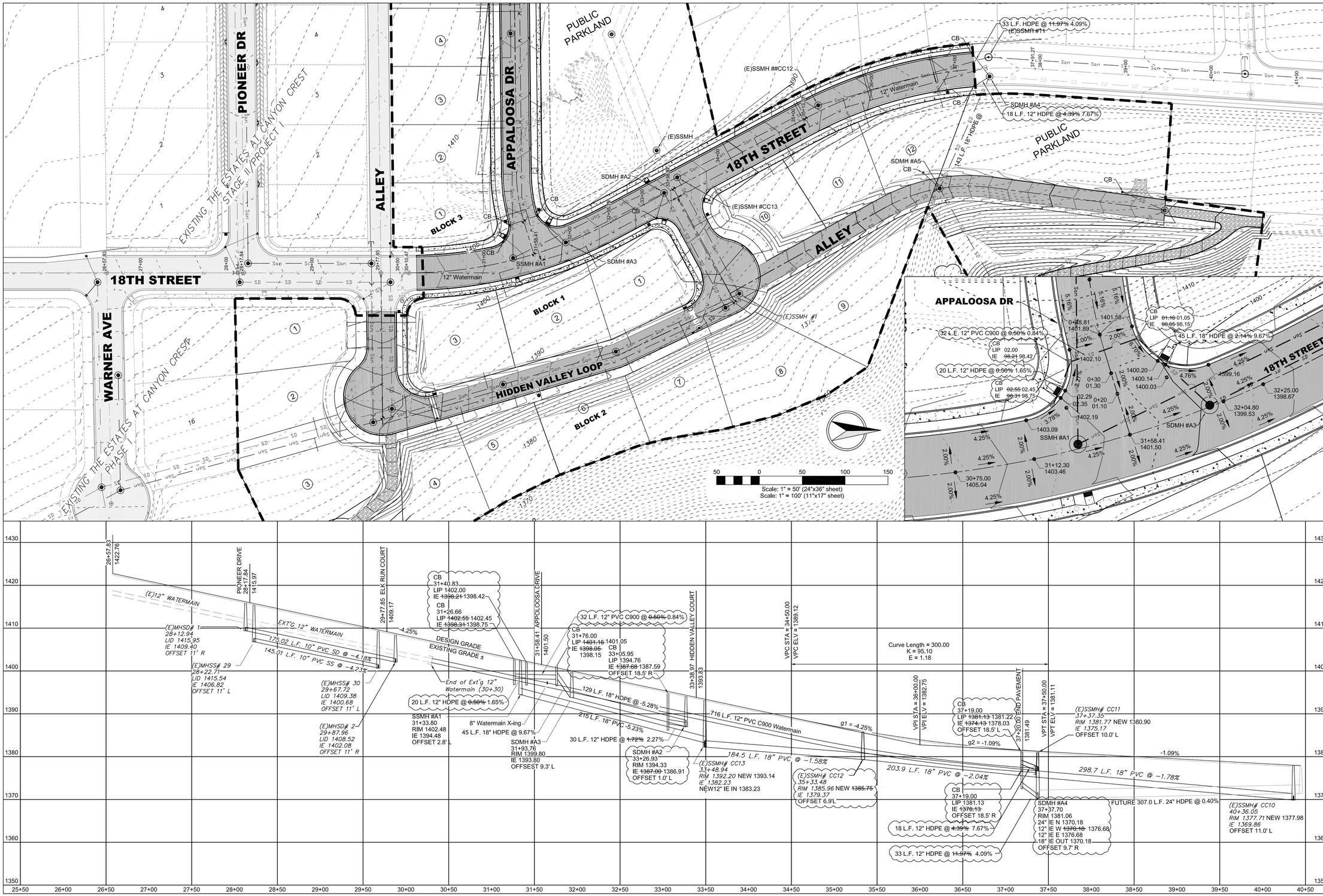

REV	DATE	DESCRIPTION	CHECKED	APPD.
A	05-12-17	Reroute Sanitary Interceptor Sewer		
B	05-22-17	Revised as per city review comments dated 4-03-2017		
AB	10-30-17	As-built data		

REVISION

ENGINEER, LAND SURVEYOR, AND PROFESSIONAL REGISTERED
#21102
STATE OF IDAHO
KYLE JOHN SHAMMO
10/31/17

SHEET SIZE	D
SCALE	1"=40'
CHECKED BY	JSH
DRAWN BY	MEE
JOB #	1650
DATE	03-03-17
SHEET	C8
DRAWING #	1650-C8

THE ESTATES AT CANYON CREST - PHASE III/ PROJECT IIIA
18TH STREET PLAN & PROFILE
RPL DEVELOPMENT CO., INC.
LEWISTON, IDAHO

HEDCO
HAMMOND ENGINEERING & DEVELOPMENT CO.
528 BRYDEN AVENUE LEWISTON, IDAHO 83501
(208) 798-5422

SHEET
C8

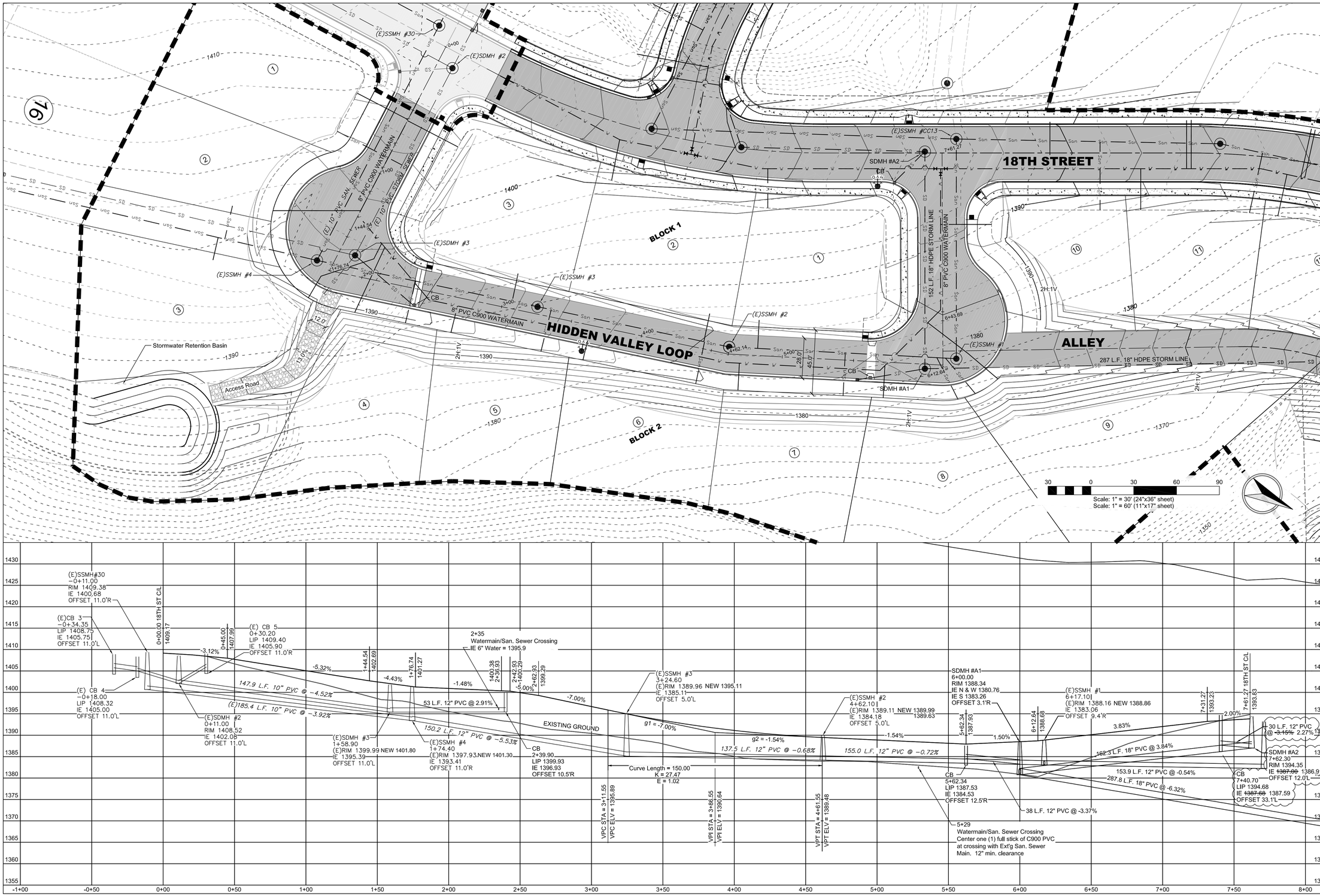

REV	DATE	REVISION DESCRIPTION	CHECKED	APPD.
A	05-12-17	revised Hidden Valley CL & Ex Run CL to be one connected street		
B	05-22-17	Revised as per city review comments dated 4-05-2017		
AB	10-30-17	As-built data		

REGISTERED PROFESSIONAL ENGINEER, LAND SURVEYOR AND ENVIRONMENTAL SCIENTIST
#2102
STATE OF IDAHO
JOHN SHAMMEN
3/3/17

SCALE	1"=30'
DRAWN BY	MEE
DATE	03-03-17
SHEET	C9
DRAWING #	1650-C9
SHEET SIZE	D
CHECKED BY	JSH
JOB #	1650

THE ESTATES AT CANYON CREST - PHASE III/ PROJECT IIIA
HIDDEN VALLEY LOOP PLAN & PROFILE
RPL DEVELOPMENT CO., INC.
LEWISTON, IDAHO

HEDCO
HAMMOND ENGINEERING & DEVELOPMENT CO.
528 BRYDEN AVENUE LEWISTON, IDAHO 83501
(208) 798-5422

SHEET
C9

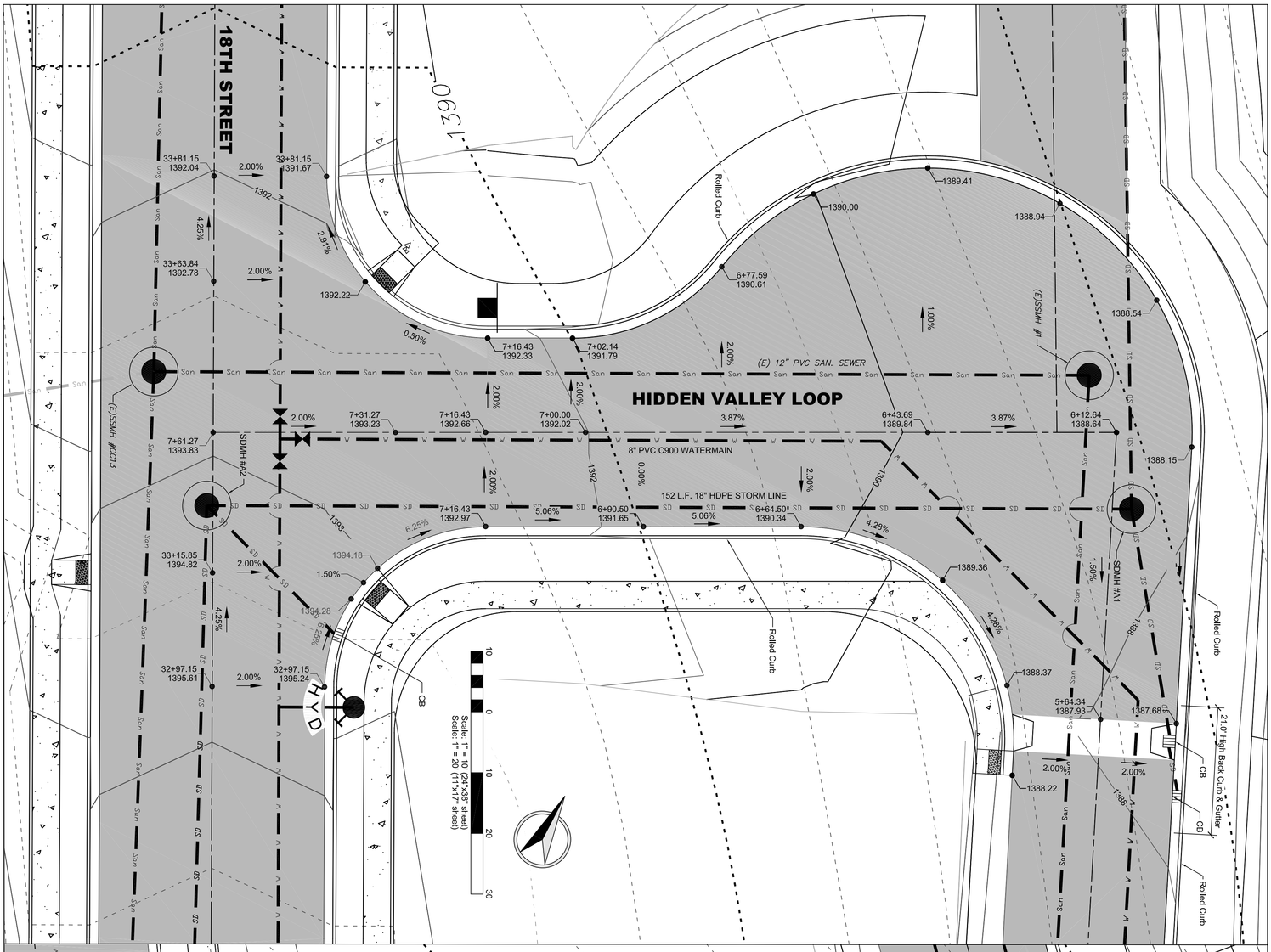

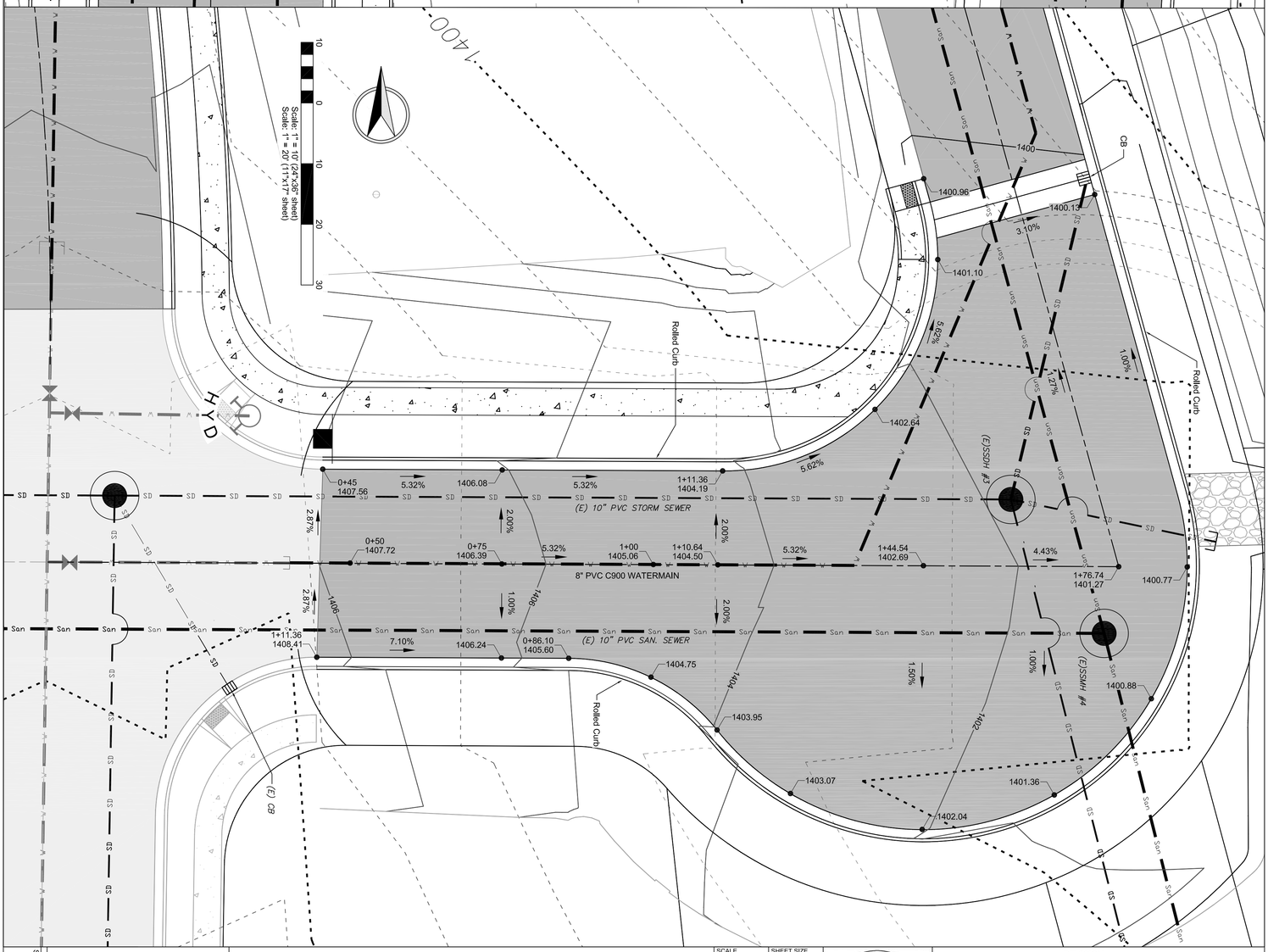

SHEET **C10**

HEDCO

HAMMOND ENGINEERING & DEVELOPMENT CO.
528 BRYDEN AVENUE LEWISTON, IDAHO 83501
(208) 798-5422

THE ESTATES AT CANYON CREST - PHASE III/ PROJECT IIIA
HIDDEN VALLEY LOOP INTERSECTION DETAILS
RPL DEVELOPMENT CO., INC.
LEWISTON, IDAHO

SCALE	1"=10'
SHEET SIZE	D
DRAWN BY	MEE
CHECKED BY	JSH
DATE	03-03-17
JOB #	1650
SHEET	C10
DRAWING #	1650-C10

PROFESSIONAL ENGINEER • LAND SURVEYOR REGISTERED #2102 STATE OF IDAHO JOHN S. HAMMOND
3/3/17

REV. LTR	DATE	REVISION DESCRIPTION	CHECKED	APPD.
B	05-22-17	Revised as per city review comments dated 4-05-2017		
AB	10-30-17	As-built data		

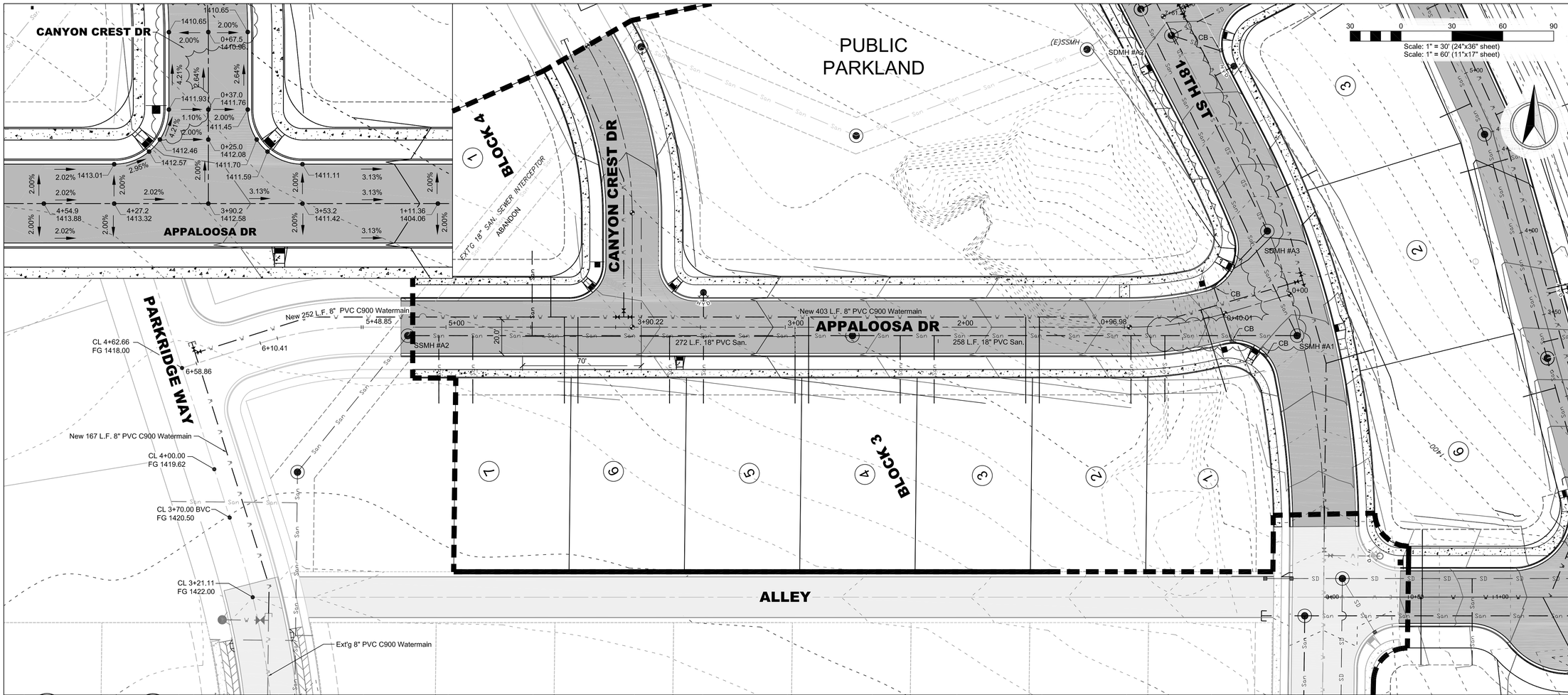

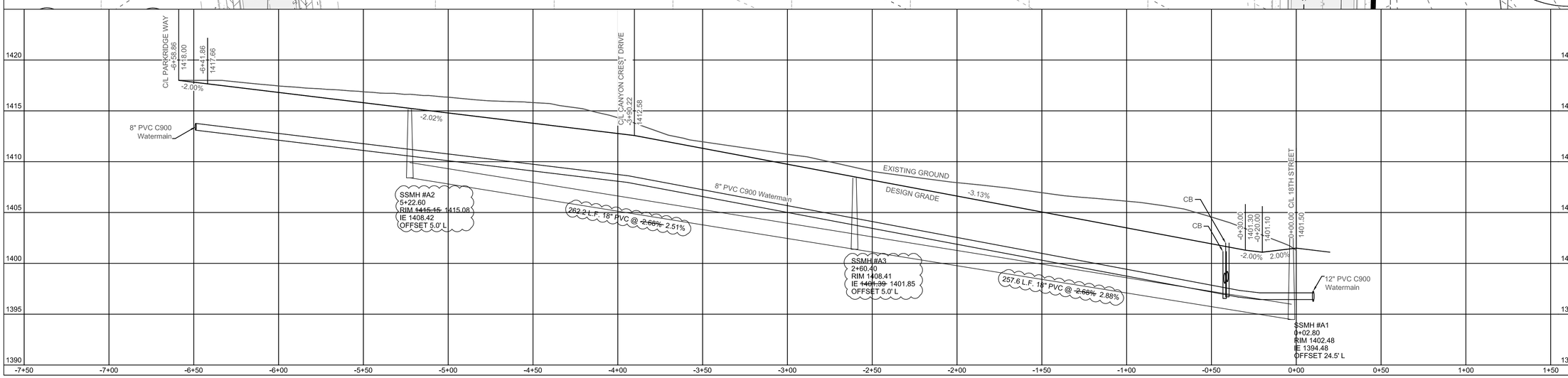

REV NO	DATE	REVISION DESCRIPTION	CHECKED	APPD.
A	05-12-17	Reroute Sanitary Interceptor Sewer: Add Lot 7, Block 3 & Lot 1,Block 4		
B	05-22-17	Revised as per city review comments dated 4-05-2017		
AB	10-30-17	As-built data		

ENGINEER, LAND SURVEYOR, OR PROFESSIONAL REGISTERED
STATE OF IDAHO
#21 02
JOHN SHAMMEN
3/3/17

SCALE 1"=30'		SHEET SIZE D	
DRAWN BY MEE		CHECKED BY JSH	
DATE 03-03-17		JOB # 1650	
SHEET C11			
DRAWING # 1650-C11			

THE ESTATES AT CANYON CREST - PHASE III/ PROJECT IIIA
APPALOOSA DRIVE PLAN & PROFILE
RPL DEVELOPMENT CO., INC.
LEWISTON, IDAHO

HEDCO
HAMMOND ENGINEERING & DEVELOPMENT CO.
528 BRYDEN AVENUE LEWISTON, IDAHO 83501
(208) 798-5422

SHEET
C11

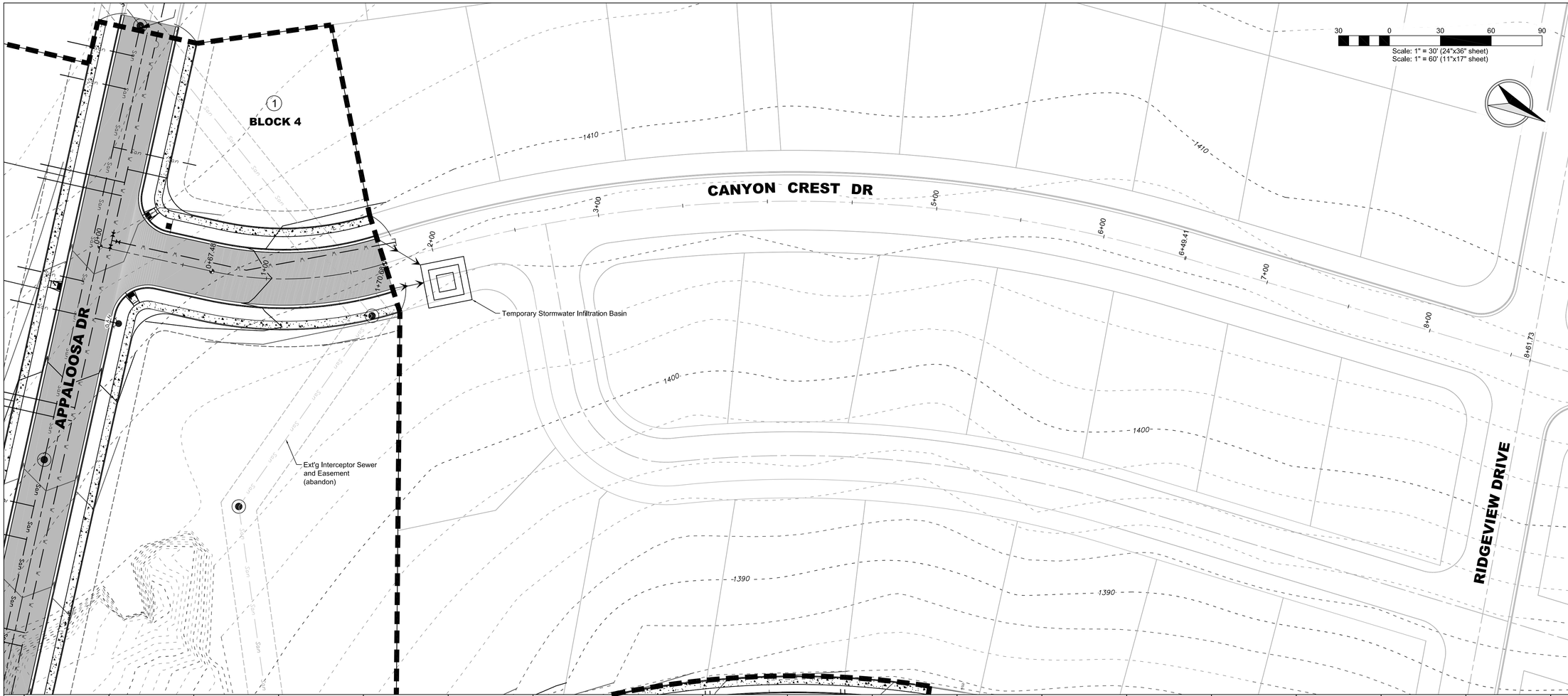

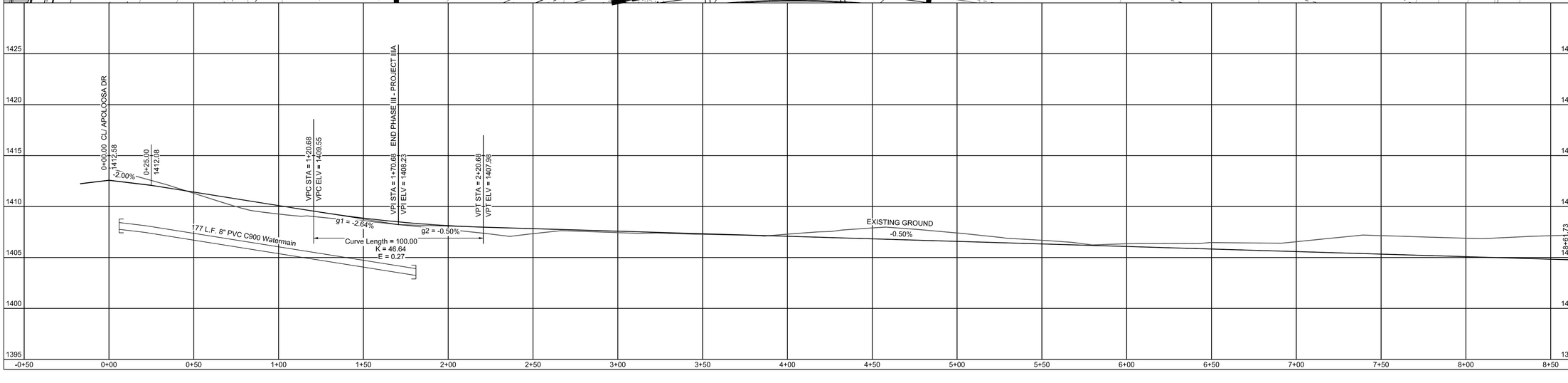

REV NO	DATE	REVISION DESCRIPTION	CHECKED	APPD.
AB	10-30-17	As-built data		

REGISTERED PROFESSIONAL ENGINEER, LAND SURVEYOR, AND PROFESSIONAL ENGINEER
STATE OF IDAHO
#21102
3/3/17

SCALE	1"=30'
DRAWN BY	MEE
DATE	03-03-17
SHEET	C12
DRAWING #	1650-C12
SHEET SIZE	D
CHECKED BY	JSH
JOB #	1650

THE ESTATES AT CANYON CREST - PHASE III/ PROJECT IIIA
CANYON CREST DRIVE PLAN & PROFILE
RPL DEVELOPMENT CO., INC.
LEWISTON, IDAHO

HEDCO
HAMMOND ENGINEERING & DEVELOPMENT CO.
528 BRYDEN AVENUE, LEWISTON, IDAHO 83501
(208) 798-5422

SHEET
C12

REV. NO.	DATE	REVISION DESCRIPTION	CHECKED	APPD.
B	05-22-17	Revised Pipe Material bowtween SDMH #A5 & SDMH A7		
C	06-06-17	Revised SDMH #A6		
AB	10-30-17	As-built data		

REGISTERED PROFESSIONAL ENGINEER, LAND SURVEYOR, AND CERTIFIED STATE OF IDAHO #21102 JOHN SHAMMEN

SCALE	1"=40'
DRAWN BY	MEE
DATE	03-03-17
SHEET	C13
DRAWING #	1650-C13
SHEET SIZE	D
CHECKED BY	JSH
JOB #	1650

THE ESTATES AT CANYON CREST - PHASE III/ PROJECT IIIA
ALLEY PLAN & PROFILE
RPL DEVELOPMENT CO., INC.
LEWISTON, IDAHO

HEDCO
HAMMOND ENGINEERING & DEVELOPMENT CO.
528 BRYDEN AVENUE LEWISTON, IDAHO 83501
(208) 798-5422

SHEET
C13

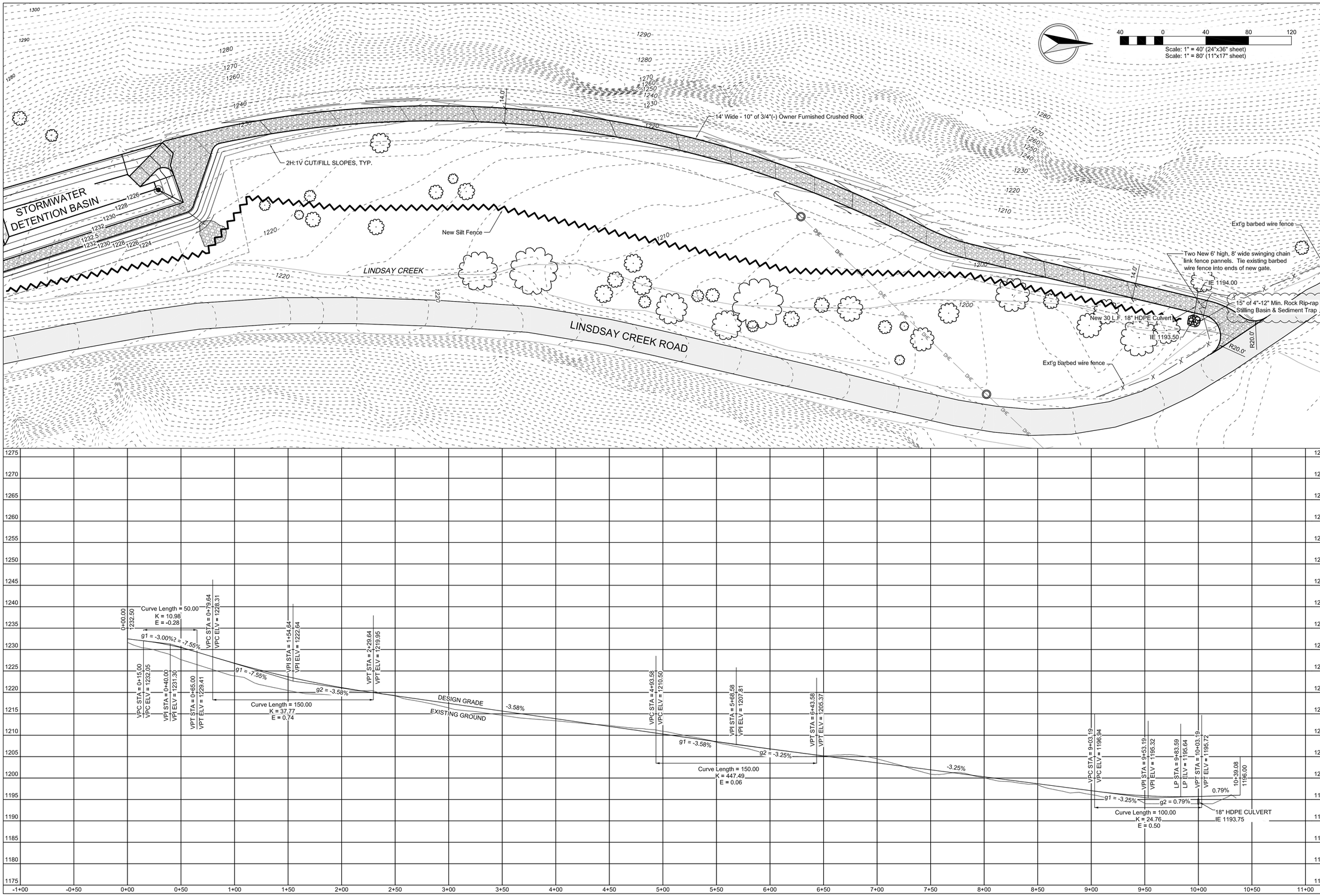

REV NO	DATE	REVISION DESCRIPTION	CHECKED	APPD.
B	05-22-17	Revised as per city review comments dated 4-05-2017		
C	06-06-17	Rip-rap Stilling Basin		
AB	10-30-17	As-built data		

REGISTERED PROFESSIONAL ENGINEER, LAND SURVEYOR, AND CERTIFIED STORMWATER MANAGER OF IDAHO #21102

SCALE 1"=40'	SHEET SIZE D		
DRAWN BY MEE	CHECKED BY JSH		
DATE 03-03-17	JOB # 1650		
SHEET C14			
DRAWING # 1650-C14			

THE ESTATES AT CANYON CREST - PHASE III/ PROJECT IIIA
ACCCESS ROAD PLAN & PROFILE
RPL DEVELOPMENT CO., INC.
LEWISTON, IDAHO

HEDCO
HAMMOND ENGINEERING & DEVELOPMENT CO.
528 BRYDEN AVENUE LEWISTON, IDAHO 83501
(208) 798-5422

SHEET **C14**

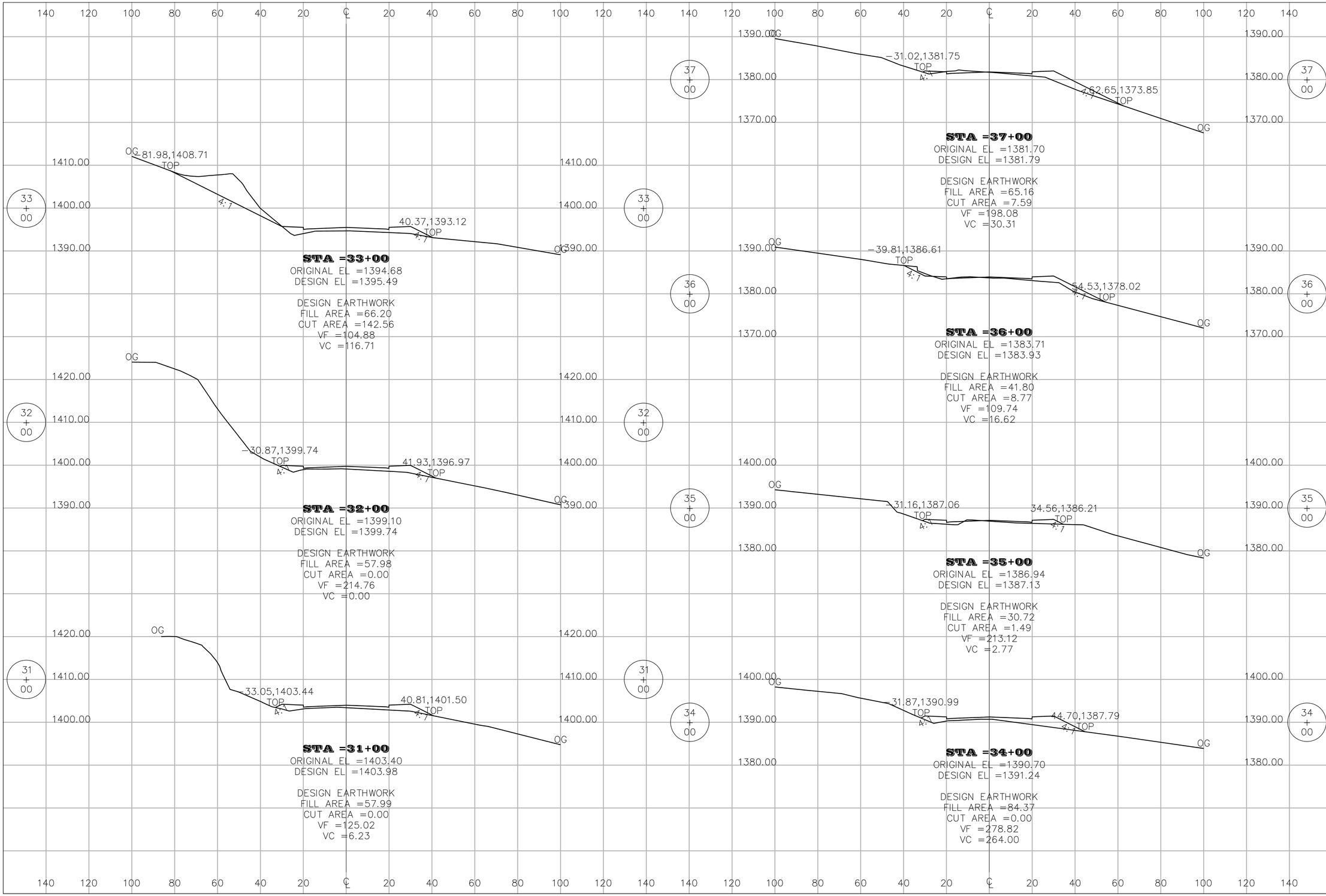

REV NO	DATE	REVISION DESCRIPTION	CHECKED	APPD.

REGISTERED PROFESSIONAL ENGINEER, LAND SURVEYOR, AND CERTIFIED STATE OF IDAHO #21102 JACK SHAMMAS 03-31-17

SCALE	
DRAWN BY	MEE
DATE	03-03-17
SHEET	C15
DRAWING #	1650-C15
SHEET SIZE	D
CHECKED BY	JSH
JOB #	1650

THE ESTATES AT CANYON CREST - PHASE III/ PROJECT IIIA
18TH STREET X-SECTIONS
RPL DEVELOPMENT CO., INC.
LEWISTON, IDAHO

HEDCO
HAMMOND ENGINEERING & DEVELOPMENT CO.
528 BRYDEN AVENUE LEWISTON, IDAHO 83501
(208) 798-5422

SHEET
C15

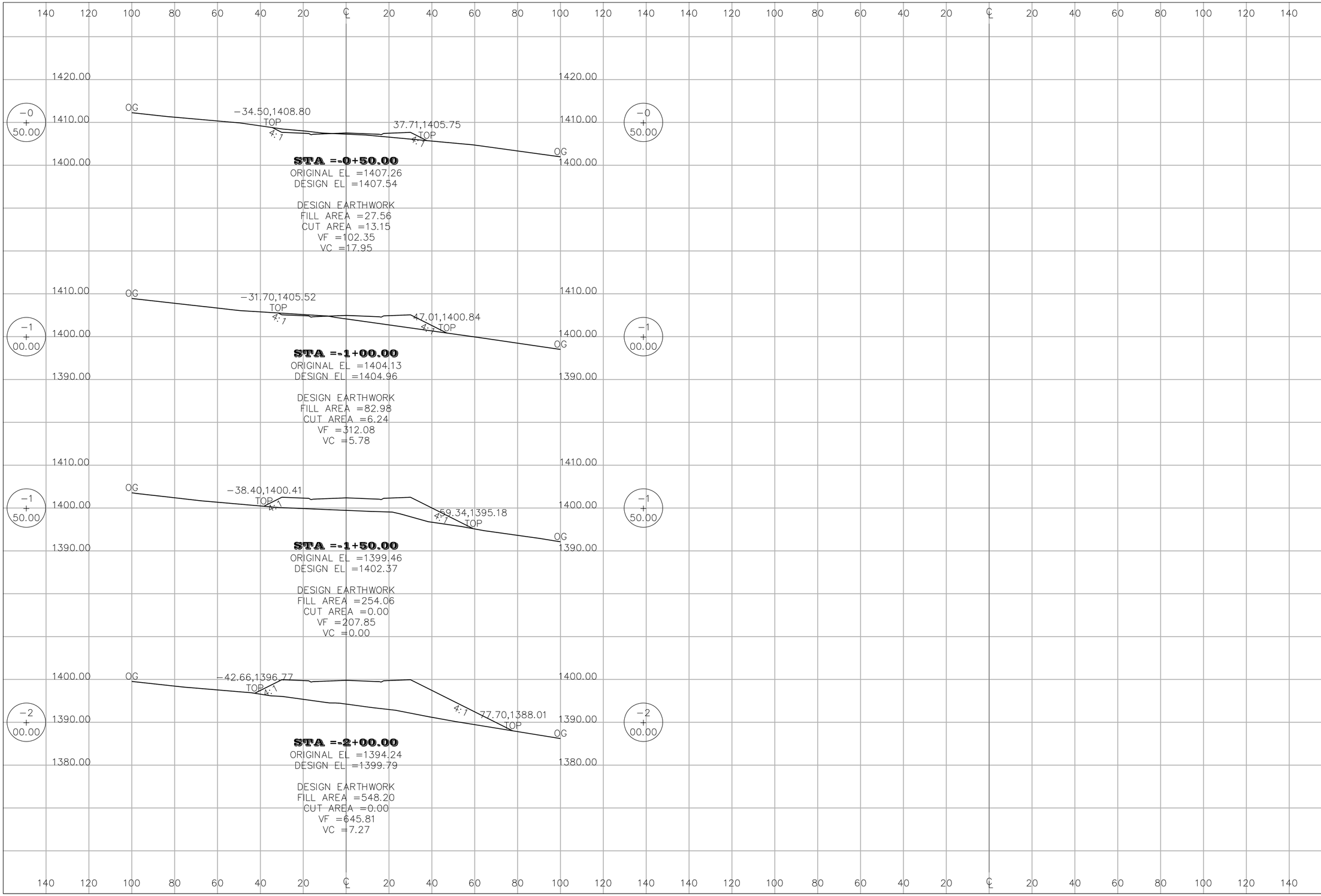

REV NO	DATE	REVISION DESCRIPTION	CHECKED	APPD.

REGISTERED PROFESSIONAL ENGINEER, LAND SURVEYOR, OR PROFESSIONAL TECHNICAL ENGINEER #2102 STATE OF IDAHO JACK SHAMMEN 5/3/17

SCALE	SHEET SIZE D
DRAWN BY MEE	CHECKED BY JSH
DATE 03-03-17	JOB # 1650
SHEET C16	
DRAWING # 1650-C16	

THE ESTATES AT CANYON CREST - PHASE III/ PROJECT IIIA
ELK RUN COURT X-SECTIONS
RPL DEVELOPMENT CO., INC.
LEWISTON, IDAHO

HEDCO
HAMMOND ENGINEERING & DEVELOPMENT CO.
528 BRYDEN AVENUE LEWISTON, IDAHO 83501
(208) 798-5422

SHEET
C16

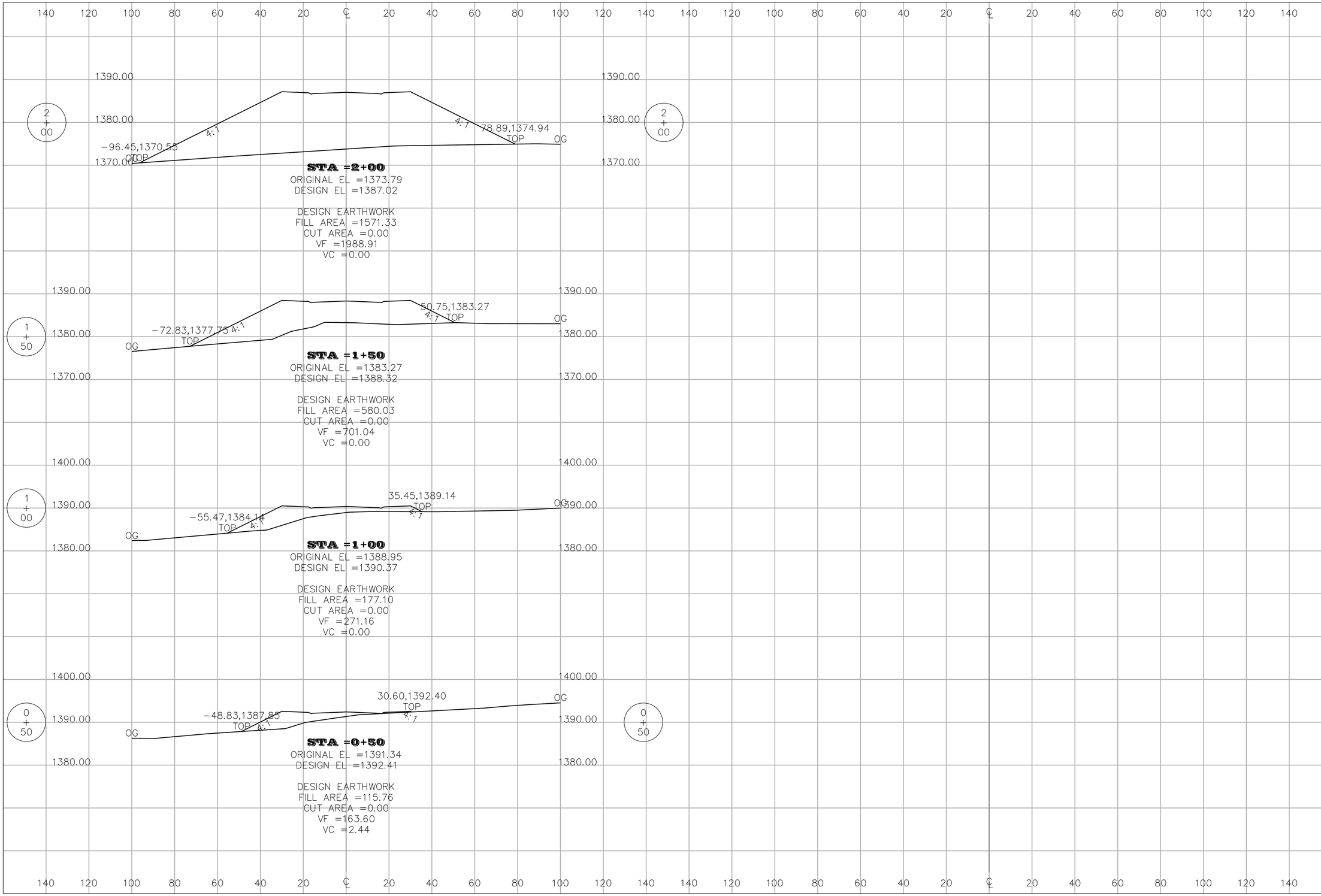

REV NO	DATE	REVISION DESCRIPTION	CHECKED	APPD.

REGISTERED PROFESSIONAL ENGINEER, LAND SURVEYOR, OR PROFESSIONAL TECHNICIAN #2102 STATE OF IDAHO

SCALE	SHEET SIZE D	CHECKED BY JSH
DRAWN BY MEE	JOB # 1650	
DATE 03-03-17	SHEET C17	
DRAWING # 1650-C17		

THE ESTATES AT CANYON CREST - PHASE III/ PROJECT IIIA
HIDDEN VALLEY COURT X-SECTIONS
RPL DEVELOPMENT CO., INC.
LEWISTON, IDAHO

HEDCO
HAMMOND ENGINEERING & DEVELOPMENT CO.
528 BRYDEN AVENUE LEWISTON, IDAHO 83501
(208) 798-5422

SHEET
17

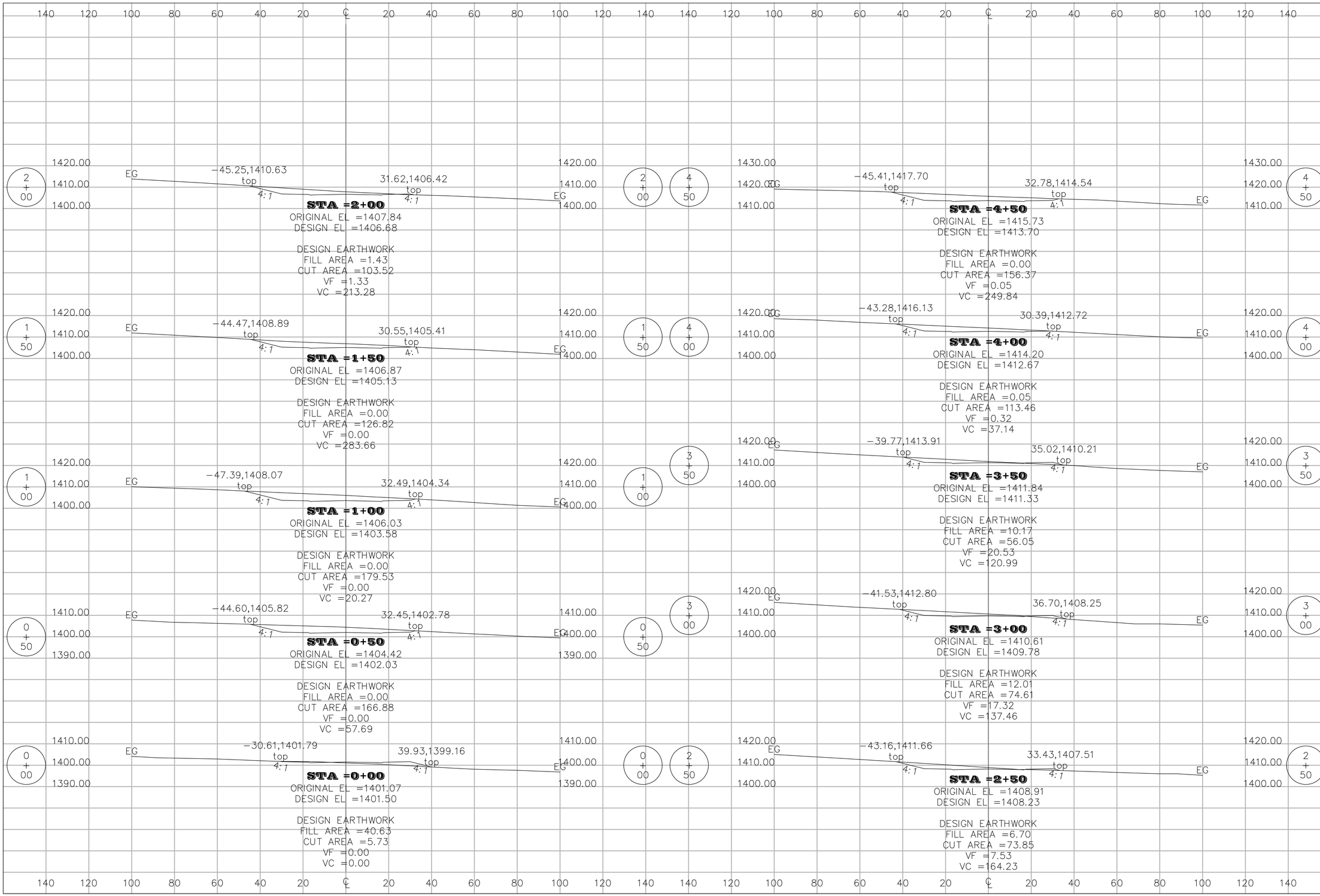

REV NO	DATE	REVISION DESCRIPTION	CHECKED	APPD.

REGISTERED PROFESSIONAL ENGINEER, LAND SURVEYOR, OR ARCHITECT #2102 STATE OF IDAHO JOHN SHAMMO

SCALE	SHEET SIZE D	CHECKED BY JSH	JOB # 1650
DRAWN BY MEE	DATE 03-03-17	SHEET C18	DRAWING # 1650-C18

THE ESTATES AT CANYON CREST - PHASE III/ PROJECT IIIA
APPALOOSA DRIVE X-SECTIONS
RPL DEVELOPMENT CO., INC.
LEWISTON, IDAHO

HEDCO
HAMMOND ENGINEERING & DEVELOPMENT CO.
528 BRYDEN AVENUE LEWISTON, IDAHO 83501
(208) 798-5422

SHEET **C18**

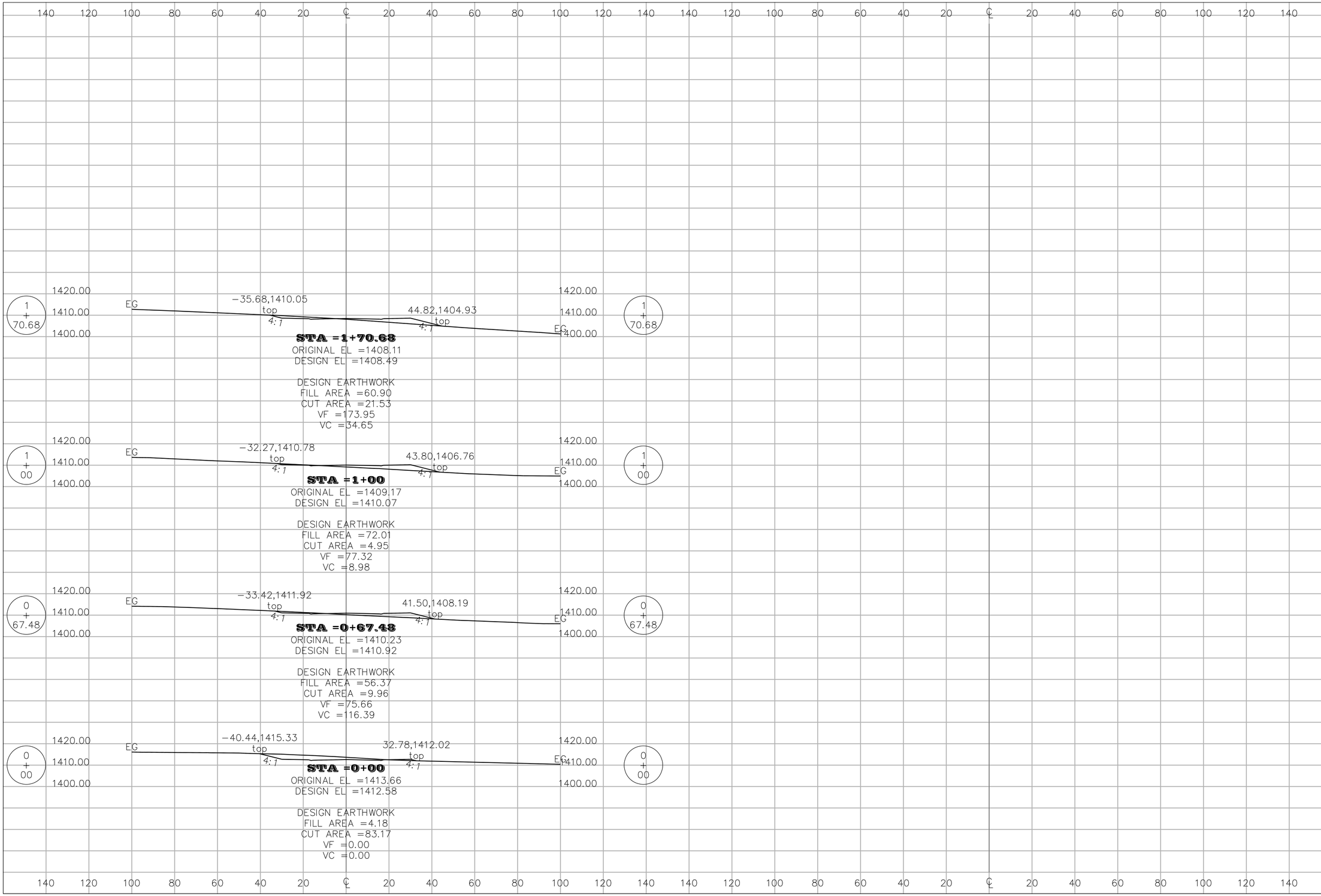

REV NO	DATE	REVISION DESCRIPTION	CHECKED	APPD.

REGISTERED PROFESSIONAL ENGINEER, LAND SURVEYOR, AND CERTIFIED SUBDIVISION OFFICER #2102 STATE OF IDAHO JACK SHAMMEN 5/3/17

SCALE | SHEET SIZE D | CHECKED BY JSH | DRAWN BY MEE | JOB # 1650 | DATE 03-03-17 | SHEET C19 | DRAWING # 1650-C19

THE ESTATES AT CANYON CREST - PHASE III/ PROJECT IIIA
CANYON CREST DRIVE X-SECTIONS
RPL DEVELOPMENT CO., INC.
LEWISTON, IDAHO

HEDCO
HAMMOND ENGINEERING & DEVELOPMENT CO.
528 BRYDEN AVENUE LEWISTON, IDAHO 83501
(208) 799-5422

SHEET **C19**

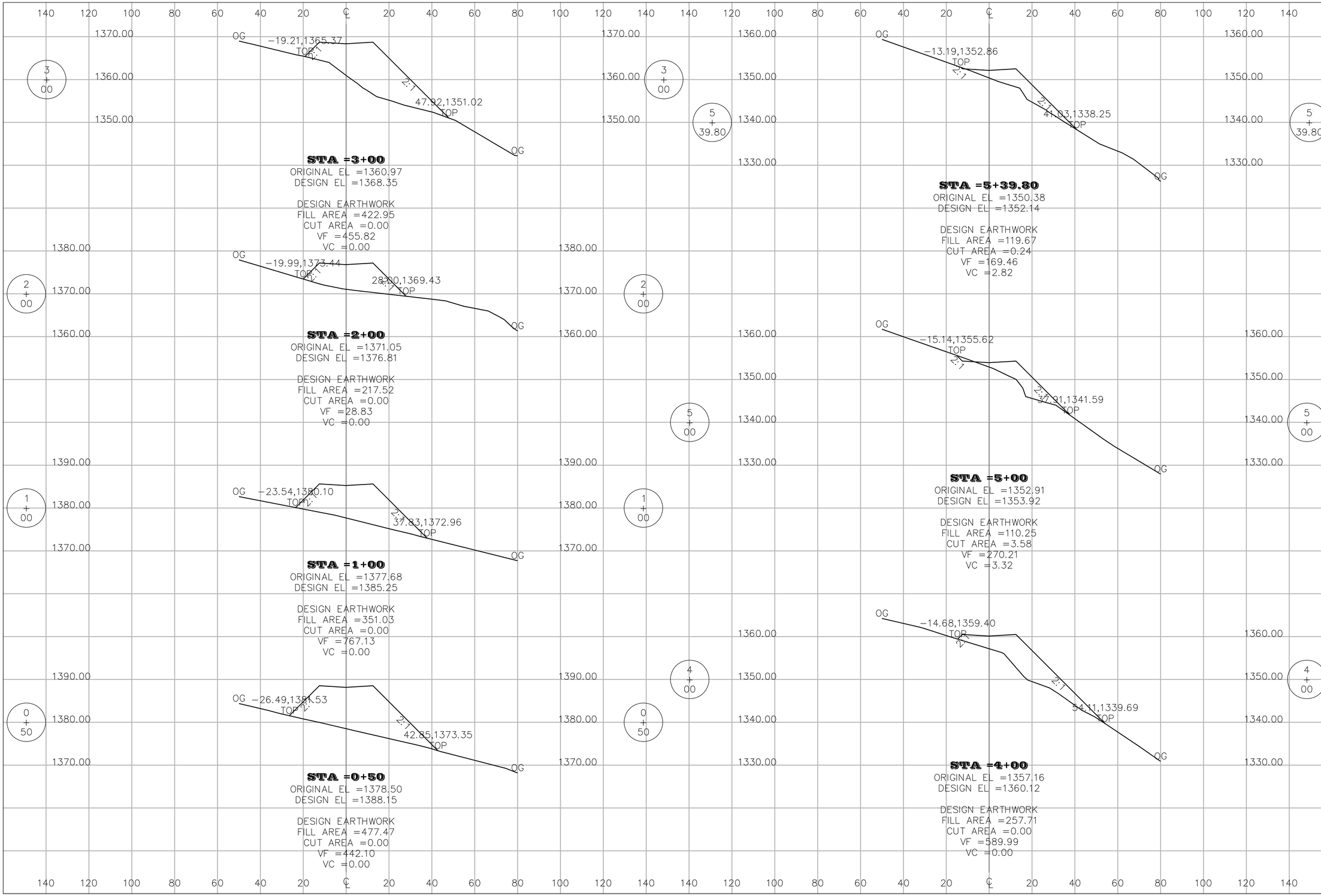

REV NO	DATE	REVISION DESCRIPTION	CHECKED	APPD.

REGISTERED PROFESSIONAL ENGINEER, LAND SURVEYOR, AND ENVIRONMENTAL SCIENTIST #2102 STATE OF IDAHO

SCALE | SHEET SIZE D | DRAWN BY MEE | CHECKED BY JSH | DATE 03-03-17 | JOB # 1650 | SHEET C20 | DRAWING # 1650-C20

THE ESTATES AT CANYON CREST - PHASE III/ PROJECT IIIA
ALLEY X-SECTIONS
RPL DEVELOPMENT CO., INC.
LEWISTON, IDAHO

HEDCO
HAMMOND ENGINEERING & DEVELOPMENT CO.
528 BRYDEN AVENUE LEWISTON, IDAHO 83501
(208) 798-5422

SHEET **C20**

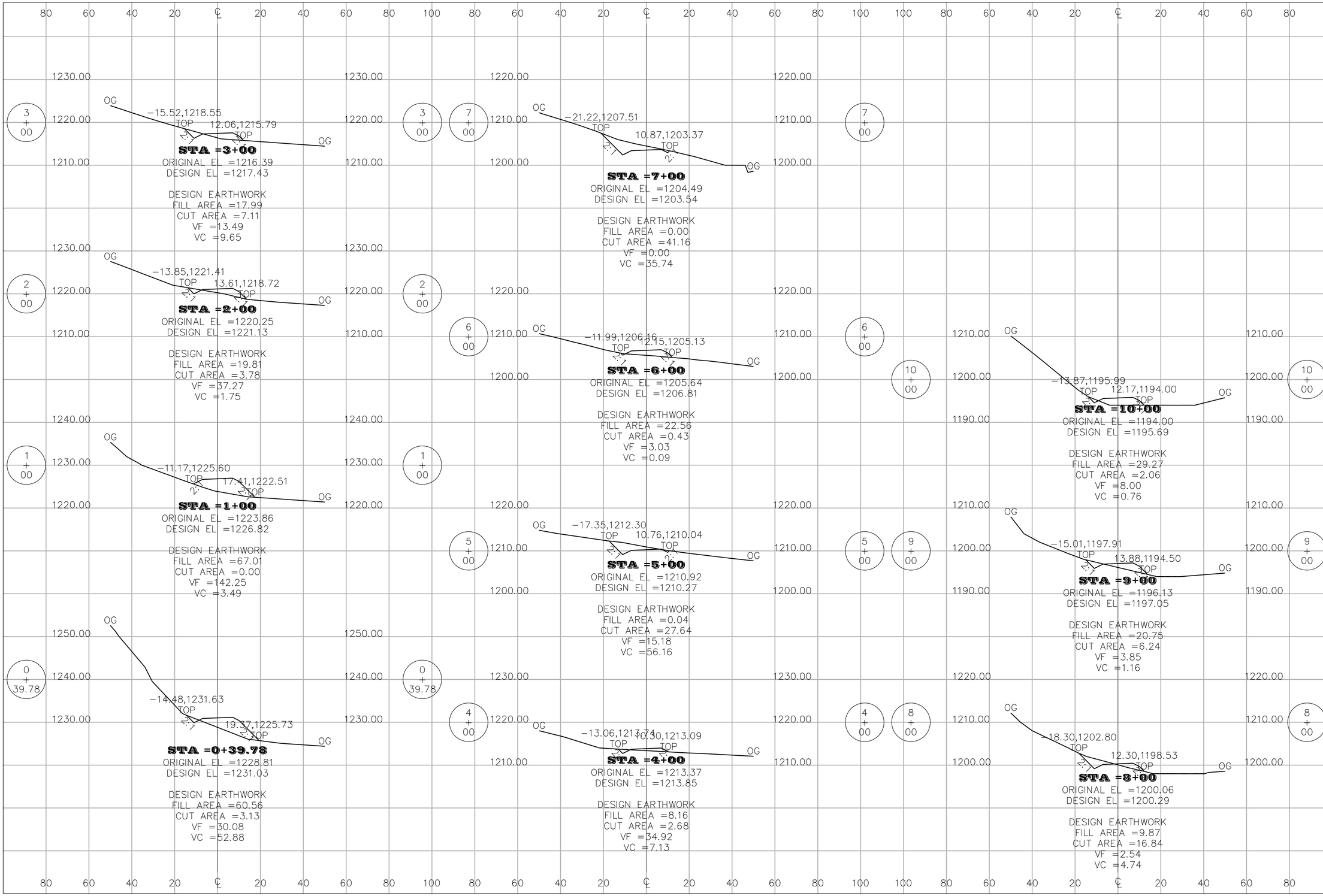

REV#	DATE	REVISION DESCRIPTION	CHECKED	APPD.

REGISTERED PROFESSIONAL ENGINEER, LAND SURVEYOR, AND CERTIFIED STATE OF IDAHO #21021 JACK SHAMMEN 03-31-17

SHEET SIZE	D
SCALE	1"=40'
DRAWN BY	MEE
CHECKED BY	JSH
DATE	03-03-17
JOB #	1650
SHEET	C21
DRAWING #	1650-C21

THE ESTATES AT CANYON CREST - PHASE III/ PROJECT IIIA
ACCCESS ROAD X-SECTIONS
RPL DEVELOPMENT CO., INC.
LEWISTON, IDAHO

HEDCO
HAMMOND ENGINEERING & DEVELOPMENT CO.
528 BRYDEN AVENUE LEWISTON, IDAHO 83501
(208) 798-5422

SHEET
C21

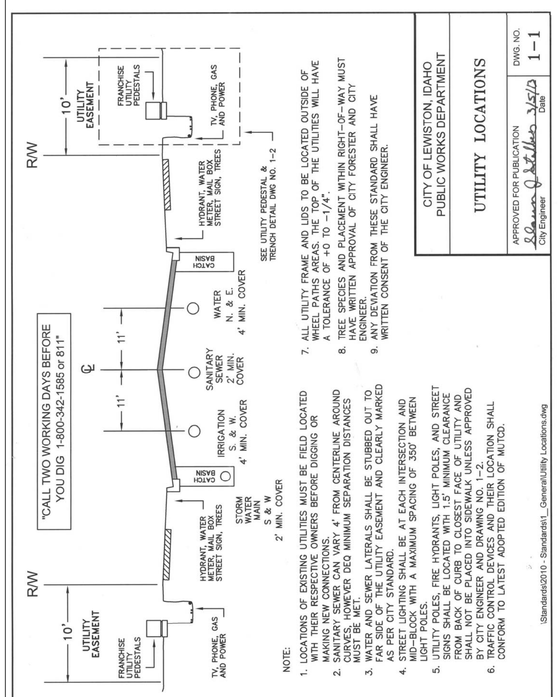

NOTE:

1. LOCATIONS OF EXISTING UTILITIES MUST BE FIELD LOCATED WITH THEIR RESPECTIVE OWNERS BEFORE DIGGING OR MAKING NEW CONNECTIONS.
2. SANITARY SEWER CAN VARY 4' FROM CENTERLINE AROUND AN ASTERISK (*) STANDARD. DUE MINIMUM SEPARATION DISTANCES MUST BE MET.
3. WATER AND SEWER LATERALS SHALL BE STUBBED OUT TO FAR SIDE OF THE UTILITY EASEMENT AND CLEARLY MARKED AS PER CITY STANDARDS.
4. STREET LIGHTING SHALL BE AT EACH INTERSECTION AND MID-BLOCK WITH A MAXIMUM SPACING OF 350' BETWEEN LIGHT POLES.
5. UTILITY POLES, FIRE HYDRANTS, LIGHT POLES, AND STREET CABINETS SHALL BE LOCATED WITHIN THE PARKWAY AREA FROM BACK OF CURB TO CLOSEST FACE OF UTILITY AND SHALL NOT BE PLACED INTO SIDEWALK UNLESS APPROVED BY CITY ENGINEER AND DRAWING NO. 1-2.
6. TRAFFIC CONTROL DEVICES AND THEIR LOCATION SHALL CONFORM TO LATEST ADOPTED EDITION OF MUTCD.
7. ALL UTILITY FRAME AND LIDS TO BE LOCATED OUTSIDE OF WHEEL PATHS AREAS. THE TOP OF THE UTILITIES WILL HAVE A TOLERANCE OF +0 TO -1/4".
8. TREE SPECIES AND PLACEMENT WITHIN RIGHT-OF-WAY MUST HAVE WRITTEN APPROVAL OF CITY FORESTER AND CITY ENGINEER.
9. ANY DEVIATION FROM THESE STANDARD SHALL HAVE WRITTEN CONSENT OF THE CITY ENGINEER.

\Standards\2010 - Standards\1_General\Utility Locations.dwg

CITY OF LEWISTON, IDAHO
PUBLIC WORKS DEPARTMENT

UTILITY LOCATIONS

APPROVED FOR PUBLICATION — City Engineer — Date 3/5/12 — DWG. NO. 1-1

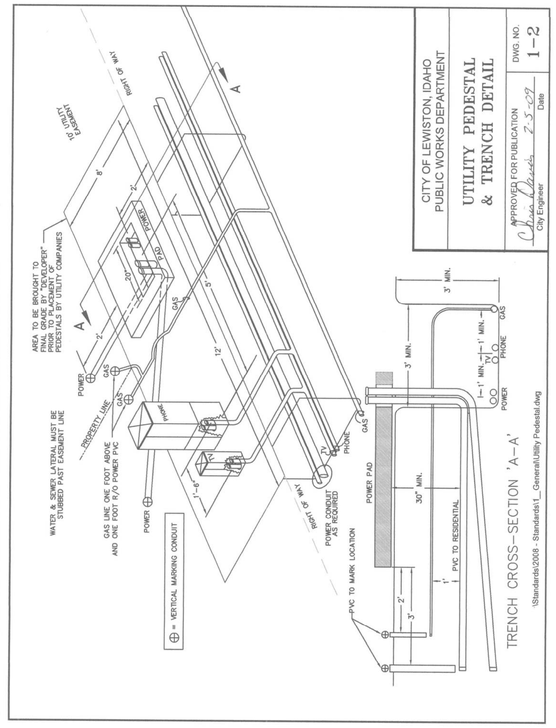

\Standards\2008 - Standards\1_General\Utility Pedestal.dwg

CITY OF LEWISTON, IDAHO
PUBLIC WORKS DEPARTMENT

UTILITY PEDESTAL & TRENCH DETAIL

APPROVED FOR PUBLICATION — City Engineer — Date 2-5-09 — DWG. NO. 1-2

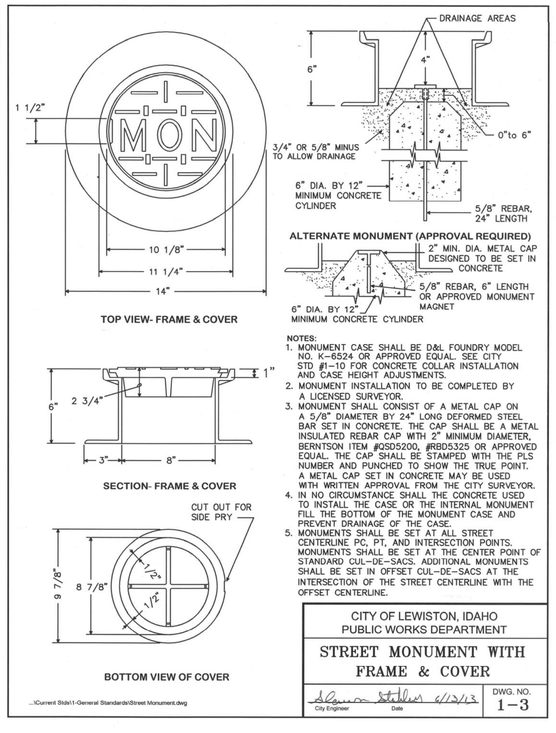

NOTES:

1. MONUMENT CASE SHALL BE D&L FOUNDRY MODEL NO. K-6524 OR APPROVED EQUAL. SEE CITY STD #1-10 FOR CONCRETE COLLAR INSTALLATION AND CASE HEIGHT ADJUSTMENTS.
2. MONUMENT INSTALLATION TO BE COMPLETED BY A LICENSED SURVEYOR.
3. MONUMENT SHALL CONSIST OF A METAL CAP ON A 5/8" DIAMETER BY 24" LONG DEFORMED STEEL BAR SET IN CONCRETE. THE CAP SHALL BE A METAL INSULATED REBAR CAP WITH 2" MINIMUM DIAMETER, BERNTSON ITEM #QSD5200, #RBD5325 OR APPROVED EQUAL. THE CAP SHALL BE STAMPED WITH THE PLS NUMBER AND PUNCHED TO SHOW THE TRUE POINT. A METAL CAP SET IN CONCRETE MAY BE USED WITH WRITTEN APPROVAL FROM THE CITY SURVEYOR.
4. IN NO CIRCUMSTANCE SHALL THE CONCRETE USED TO INSTALL THE CASE OR THE INTERNAL MONUMENT FILL THE BOTTOM OF THE MONUMENT CASE AND PREVENT DRAINAGE OF THE CASE.
5. MONUMENTS SHALL BE SET AT ALL STREET CENTERLINE PC, PT, AND INTERSECTION POINTS. MONUMENTS SHALL BE SET AT THE CENTER POINT OF STANDARD CUL-DE-SACS. ADDITIONAL MONUMENTS SHALL BE SET IN OFFSET CUL-DE-SACS AT THE INTERSECTION OF THE STREET CENTERLINE WITH THE OFFSET CENTERLINE.

...\Current Stds\1-General\Standards\Street Monument.dwg

CITY OF LEWISTON, IDAHO
PUBLIC WORKS DEPARTMENT

STREET MONUMENT WITH FRAME & COVER

City Engineer — Date 6/12/13 — DWG. NO. 1-3

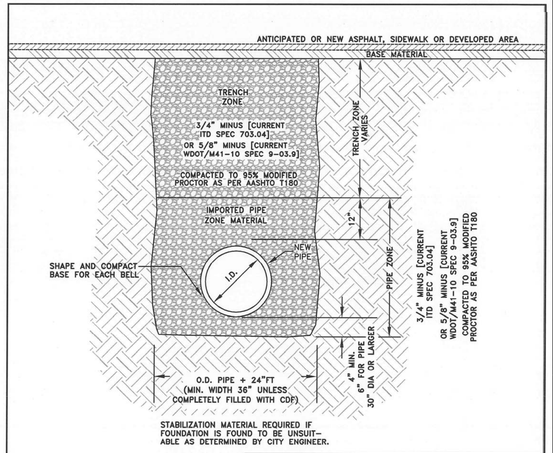

CLASS 'D' 'NEW STREET CONSTRUCTION' BACKFILL SHALL BE USED IN AREAS WHERE ASPHALT PAVEMENT, CONCRETE CURB, SIDEWALK, DRIVEWAYS & GRAVEL SURFACING IS ANTICIPATED.

NOTES:

1. CONTRACTOR SHALL COMPLY WITH THE MOST CURRENT OSHA REQUIREMENTS FOR EXCAVATIONS.
2. CLASS 'D' BACKFILL SHALL COMPLY WITH REQUIREMENTS OF THE CITY'S STANDARDS CONSTRUCTION SPECIFICATIONS.
3. TRENCH MATERIAL SHALL BE PLACED IN MAX. OF 6" LIFTS.
4. IN EXISTING RIGHT-OF-WAY TRENCH EXCAVATION SHALL NOT BE MORE THAN 100 FEET AHEAD OF THE PIPE LAYING OPERATION.
5. TRENCHES ARE TO BE BACKFILLED AT THE END OF EACH DAY.
6. ANY ALTERATIONS TO THIS STANDARD MUST HAVE WRITTEN APPROVAL BY CITY ENGINEER.

...\Current Stds\1-General\BackFill__ClassD.dwg

CITY OF LEWISTON, IDAHO
PUBLIC WORKS DEPARTMENT

BACKFILL CLASS 'D'

APPROVED FOR PUBLICATION — City Engineer — Date 7/5/13 — DWG. NO. 1-6

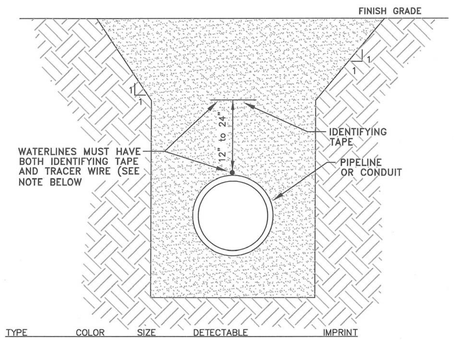

TYPE	COLOR	SIZE	DETECTABLE	IMPRINT
WATER	BLUE	3"	NO	CAUTION BURIED WATER LINE BELOW

NO. 12 AWG. COPPER TRACER WIRE INSULATED WITH 30 MIL OF HIGH DENSITY POLYETHYLENE (HDPE) CLASSIFIED AS HIGH MOLECULAR WEIGHT POLYETHYLENE (HMWPE) IN 500 FT REELS. WIRE SHALL BE ATTACHED TO WATERLINE AT INTERVALS NOT TO EXCEED 15 FT SEPARATION.

ALL SPLICES SHALL BE 3M DIRECT BURY SPLICE KIT DBR/Y-6 AND CONTRACTOR SHALL CONDUCT A CONDUCTIVITY TEST ON ALL LOCATING WIRE SPLICES.

TYPE	COLOR	SIZE	DETECTABLE	IMPRINT
STORM SEWER	GREEN	3"	NO	CAUTION BURIED STORM SEWER LINE BELOW
SANITARY SEWER	GREEN	3"	NO	CAUTION BURIED SEWER LINE BELOW
GAS	YELLOW	3"	NO	CAUTION BURIED GAS LINE BELOW
CABLE	ORANGE	3"	NO	CAUTION BURIED CABLE LINE BELOW
ELECTRICAL	RED	3"	NO	CAUTION BURIED ELECTRIC LINE BELOW

CITY OF LEWISTON, IDAHO
PUBLIC WORKS DEPARTMENT

IDENTIFYING TAPE DETAIL

APPROVED FOR PUBLICATION — City Engineer — Date 2/11/16 — DWG. NO. 1-8

...\Current Stds\1-General\Identifying Tape.dwg

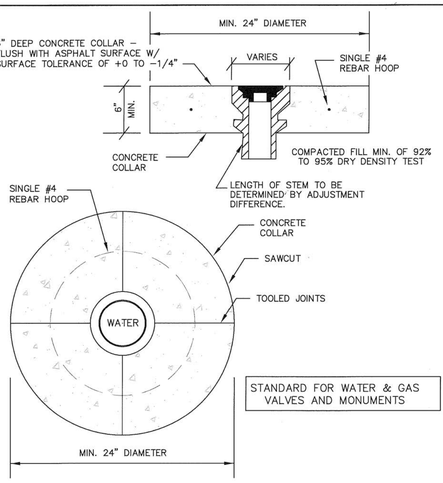

STANDARD FOR WATER & GAS VALVES AND MONUMENTS

NOTES:

1.) A CIRCULAR-SHAPED CONCRETE COLLAR IS REQUIRED ON ALL INSTALLATIONS; IN BOTH PAVED OR UNIMPROVED AREAS. INSTALL A 6" THICK CONCRETE COLLAR THAT SHALL BE FLUSH WITH THE ASPHALT SURFACE WITH A SURFACE TOLERANCE OF +0 TO -1/4".
2.) CONCRETE SHALL BE 3,000 PSI MIN. AT 28 DAYS, WATER/CEMENT RATIO SHALL BE 0.5, 3" MAX. SLUMP AND 3% TO 6% ENTRAINED AIR WITH ONE #4 REBAR HOOP. FIBER-REINFORCED CONCRETE (ADDED PER MANUFACTURER'S RECOMMENDATIONS) MAY BE USED IN LIEU OF #4 REBAR.
3.) ALL EDGES WILL BE SEALED WITH CSSI OR APPROVED EQUAL. ALL TOP EDGES WILL BE TACKED AND SAND SEALED.
4.) UTILITY FRAMES AND LIDS ARE PREFERRED OUTSIDE OF WHEEL PATH, WHERE POSSIBLE.

...\1-General\Adjust Utilities.dwg

CITY OF LEWISTON, IDAHO
PUBLIC WORKS DEPARTMENT

WATER & GAS VALVES, AND MONUMENTS ADJUST UTILITIES

APPROVED FOR PUBLICATION — City Engineer — Date 1/27/15 — DWG. NO. 1-10

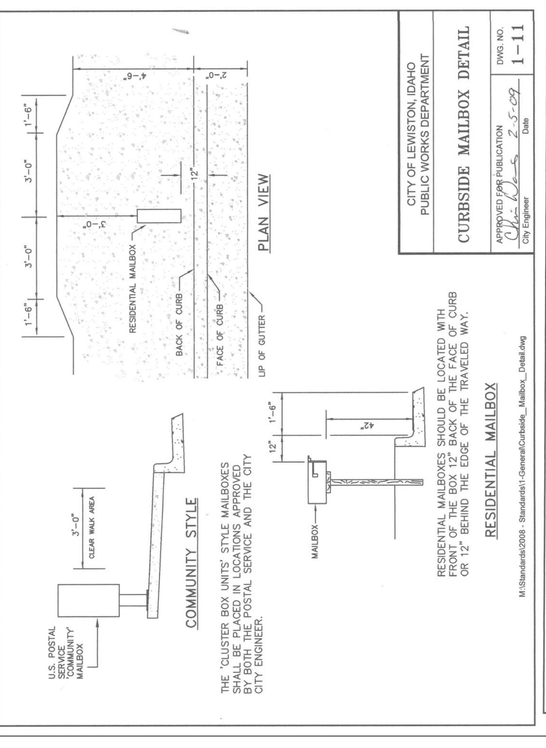

M:\Standards\2008 - Standards\1_General\Curbside_Mailbox_Detail.dwg

CITY OF LEWISTON, IDAHO
PUBLIC WORKS DEPARTMENT

CURBSIDE MAILBOX DETAIL

APPROVED FOR PUBLICATION — City Engineer — Date 2-5-09 — DWG. NO. 1-11

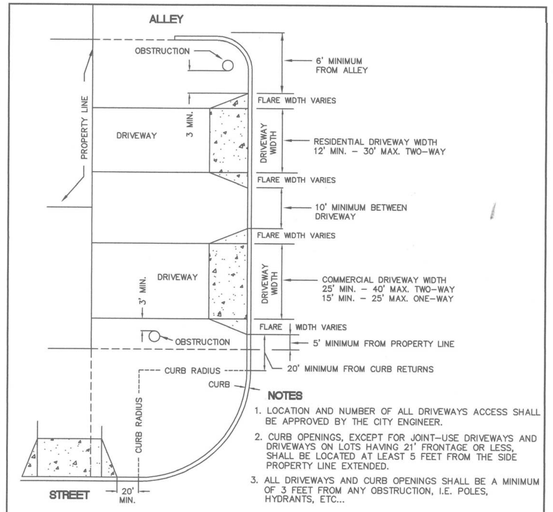

NOTES

1. LOCATION AND NUMBER OF ALL DRIVEWAYS ACCESS SHALL BE APPROVED BY THE CITY ENGINEER.
2. CURB OPENINGS, EXCEPT FOR JOINT-USE DRIVEWAYS AND DRIVEWAYS ON LOTS HAVING 21' FRONTAGE OR LESS, SHALL BE LOCATED AT LEAST 5 FEET FROM THE SIDE PROPERTY LINE EXTENDED.
3. ALL DRIVEWAYS AND CURB OPENINGS SHALL BE A MINIMUM OF 3 FEET FROM ANY OBSTRUCTION, I.E. POLES, HYDRANTS, ETC...
4. NO PORTION OF ANY DRIVEWAY SHALL BE ALLOWED ACROSS A PROPERTY LINE EXTENDED NORMAL TO THE ROADWAY FROM THE FRONT CORNER OF THE PROPERTY, EXCEPT THAT JOINT-USE DRIVEWAYS MAY BE PERMITTED IN SPECIAL INSTANCES WHERE WRITTEN APPROVAL OF BOTH PROPERTY OWNERS IS FILED WITH THE COUNTY RECORDER'S OFFICE.
5. APPROACH ALIGNMENT: APPROACH ANGLES OF LESS THAN 45° OR GREATER THAN 135° WILL NOT BE PERMITTED.
6. DRIVEWAYS MUST BE POSITIONED TO PRESERVE A CLEAR VIEW TRIANGLE OF 20 FEET ALONG THE PROPERTY LINE.
7. ON CORNER LOTS, DRIVEWAYS MUST BE ALONG THE PROPERTY LINE FURTHEST FROM THE INTERSECTION. LEAVE A TWO FOOT SPACE BETWEEN THE DRIVEWAY AND PROPERTY LINE FOR THE WATER METER.

M:\Standards\2008 - Standards\2_Concrete \Driveway__Location.dwg

CITY OF LEWISTON, IDAHO
PUBLIC WORKS DEPARTMENT

DRIVEWAY LOCATION & WIDTH REQUIREMENT

APPROVED FOR PUBLICATION — City Engineer — Date 2-5-09 — DWG. NO. 2-1

REV NO.	DATE	REVISION DESCRIPTION	CHECKED	APPD.

ENGINEER, LAND SURVEYOR, STATE OF IDAHO, REGISTERED PROFESSIONAL #2102, 5/13/14

SCALE	
SHEET SIZE	D
DRAWN BY	MEE
CHECKED BY	JSH
DATE	03-03-17
JOB #	1650
SHEET	C22
DRAWING #	1650-C22

PROJECT IIIA

THE ESTATES AT CANYON CREST - PHASE III/ PROJECT IIIA
STANDARD DETAILS
RPL DEVELOPMENT CO., INC.
LEWISTON, IDAHO

HEDCO
HAMMOND ENGINEERING & DEVELOPMENT CO.
528 BRYDEN AVENUE LEWISTON, IDAHO 83501
(208) 798-5422

SHEET **C22**

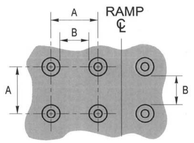

PLAN

	MIN.	MAX.
A	1.6"	2.4"
B	.65"	1.5"
C	50% -65% OF BASE DIA.	
D	.9"	1.4"

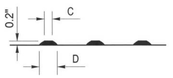

SECTION VIEW

THIS PATTERN AREA SHALL BE YELLOW IN COLOR

Notes:

1. Detectable truncated-dome warning, 2 ft wide, must be provided for the full width of ramps and blended connections to mark the street edge and fully approved by current ADA requirements.
2. At least one corner of the detectable warning panel shall be coincident to the back of curb

CITY OF LEWISTON, IDAHO
PUBLIC WORKS DEPARTMENT

DETECTABLE WARNING FOR PEDESTRIAN ACCESS

APPROVED FOR PUBLICATION 9/1/10 City Engineer Date — DWG. NO. 2-5

\Standards\2010-Standards\2-Concrete\Detectable Dome.dwg

GENERAL NOTES FOR ALL TYPES OF CURB AND GUTTER

1. SECURE A PERMIT FOR CONSTRUCTION, BEFORE BEGINNING CONSTRUCTION IN PUBLIC RIGHT-OF-WAY.
2. GRADE, ALIGNMENT AND CURB TYPE SHALL BE AS APPROVED BY THE CITY ENGINEER.
3. ALIGNMENT AND GRADE STAKED TO LIP OF GUTTER (LIP) SHALL BE ESTABLISHED OR APPROVED BY THE CITY ENGINEER.
4. THE TOLERANCE FOR FINISHED CURB AND GUTTER – MAX. VARIATION OF SURFACE FLATNESS: 1/4 INCH IN 10 FEET MAX. VARIATION FROM TRUE POSITION (DESIGN GRADE): 1/2 INCH
5. BASE MATERIAL SHALL BE 4" OF 3/4 INCH MINUS [CURRENT ITD SPEC 703.04] OR 5/8 INCH MINUS [CURRENT WDOT/M41-10 SPEC 9-03.9] CRUSHED AGGREGATE BASE MATERIAL COMPACTED TO 95% MAXIMUM DENSITY AS DETERMINED BY MODIFIED PROCTOR AS PER AASHTO T180. ALL FILL OR BACKFILL AREAS SHALL BE PLACED IN 6" TO 8" MAXIMUM LIFTS. IN AREAS OF SMALL PROJECTS, LIMITED HEAVY TRUCK TRAFFIC OR WHERE COMPACTION EQUIPMENT HAS LIMITED ACCESS A REDUCED % COMPACTION MAY BE ALLOWED WITH WRITTEN APPROVAL FROM PUBLIC WORK DIRECTOR.
6. CONCRETE SHALL BE 3,000 PSI MINIMUM AT 28 DAYS, MAXIMUM WATER/CEMENT RATIO SHALL BE 0.5 (LB/LB), 5" MAX. SLUMP, AIR CONTENT (%) 6.5 ±1.5.
7. DUMMY JOINTS AT 10 FOOT INTERVALS AND AT CURB RADII, 3/4" TO 1" DEEP. CONSTRUCTION JOINTS LOCATIONS AS DIRECTED BY CITY ENGINEER. DIFFERENTIAL ELEVATION BETWEEN ADJACENT SECTIONS SHALL NOT EXCEED 1/4".
8. THE CONTRACTOR ARE REQUIRED BY THE PUBLIC WORKS DEPARTMENT TO MARK STUB-OUTS AND VALVES IN THE UNCURED CONCRETE.
9. THE CONTRACTOR OR OWNER SHALL NOTIFY THE PUBLIC WORKS DEPARTMENT FOR INSPECTION AFTER THE FORMS ARE SET AND THE PUBLIC WORKS DEPARTMENT SHALL BE NOTIFIED NO LESS THAN 2 WORKING DAYS BEFORE PLACEMENT OF CONCRETE FOR A FINAL INSPECTION. FAILURE TO NOTIFY THE PUBLIC WORKS DEPARTMENT IS GROUNDS FOR REJECTION OF CURB AND GUTTER.
10. CONCRETE SURFACE TO HAVE A LIGHT BROOM FINISH PARALLEL WITH THE LENGTH OF THE CURB.
11. APPLY UNIFORM COAT OF REZ-SEAL OR APPROVED EQUIVALENT CURING COMPOUND TO EXPOSED CONCRETE IMMEDIATELY AFTER FINISHING..
12. ROLLED CURB AND GUTTER SHALL NOT BE USED:
    A. ON STREETS IN COMMERCIAL AND INDUSTRIAL ZONED AREAS.
    B. ON STREETS WITH LONGITUDINAL (LENGTHWISE) GRADES IN EXCESS OF 6%.
    C. ON ANY ARTERIAL OR COLLECTOR
    D. WITHOUT PRIOR APPROVAL OF THE CITY ENGINEER.
    E. WHEN SIDEWALK IS LOCATED AT THE BACK OF CURB.

CITY OF LEWISTON, IDAHO
PUBLIC WORKS DEPARTMENT

GENERAL NOTES FOR ALL TYPES OF CURB AND GUTTER

APPROVED FOR PUBLICATION 7/24/13 City Engineer Date — DWG. NO. 2-6

M:\Standards\2010-Standards\2-Concrete\General__Notes__Concrete.dwg

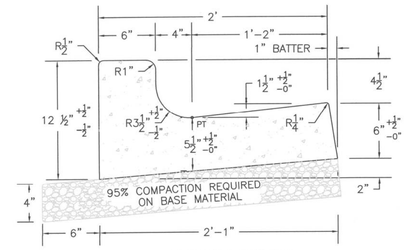

HIGH BACK CURB & GUTTER

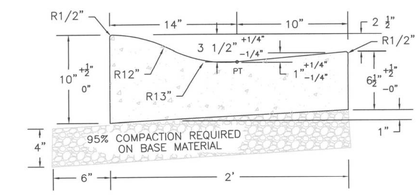

ROLLED CURB & GUTTER

ALL TOLERANCES ARE ±1/4" UNLESS OTHERWISE NOTED

CITY OF LEWISTON, IDAHO
PUBLIC WORKS DEPARTMENT

HIGH BACK CURB & GUTTER
ROLLED CURB & GUTTER

APPROVED FOR PUBLICATION 2-5-09 City Engineer Date — DWG. NO. 2-7

M:\Standards\2008 - Standards\2_Concrete\HighBack__Rolled__Curb.dwg

SECURE A PERMIT FOR CONSTRUCTION, BEFORE BEGINNING CONSTRUCTION IN PUBLIC RIGHT-OF-WAY

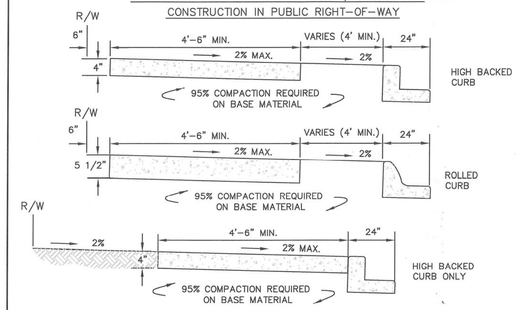

GENERAL NOTES FOR ALL SIDEWALK:

1. LINE AND GRADE STAKED T.S., TOP OF SIDEWALK, B.S., BACK OF SIDEWALK.
2. GRADE AND ALIGNMENT TO BE APPROVED BY THE CITY ENGINEER.
3. THE TOLERANCE FOR FINISHED SIDEWALK – MAX. VARIATION OF SURFACE FLATNESS: 1/4 INCH IN 10 FEET MAX. VARIATION FROM TRUE POSITION (DESIGN GRADE): 1/2 INCH NO PONDING IS ALLOWED ON SIDEWALKS, STEPS OR PEDESTRIAN RAMPS.
4. BASE MATERIAL SHALL BE 4" OF 3/4" MINUS [CURRENT ITD SPEC 703.04] OR 5/8" MINUS [CURRENT WDOT/M41-10 SPEC 9-03.9] CRUSHED AGGREGRATE BASE MATERIAL COMPACTED TO 95% MAXIMUM DENSITY AS DETERMINED BY MODIFIED PROCTOR AS PER AASHTO T180. ALL FILLS OR BACKFILL AREAS SHALL BE PLACED IN 6" MAX. LIFTS.
5. CONTRACTION/DUMMY JOINTS SHALL BE PLACED AT 5' INTERVALS, 3/4" TO 1" DEEP; INSTALL A PEPTH & WIDTH EVERY 100 FEET.
6. CONCRETE SHALL BE 3,000 PSI MIN. AT 28 DAYS, MAX. WATER/CEMENT RATIO SHALL BE RATIO SHALL BE 0.5 (LB.LB), 5" MAX. SLUMP, AIR CONTENT (%) 6.5 ±1.5.
7. THE CONTRACTOR OR OWNER SHALL NOTIFY THE PUBLIC WORKS DEPT. FOR INSPECTION OF BASE MATERIAL AFTER FORMS ARE SET AND THE PUBLIC WORKS DEPT. WILL BE NOTIFIED NO LESS THAN 2 WORKING DAYS BEFORE PLACEMENT OF CONCRETE, FOR FINAL INSPECTION.
8. CONCRETE SURFACE SHALL HAVE LIGHT BROOM FINISH PEPERENDICULAR TO LENGTH OF S/W.
9. APPLY UNIFORM COAT OF REZ-SEAL OR APPROVED EQUIVALENT CURING COMPOUND TO EXPOSED CONCRETE IMMEDIATELY AFTER FINISHING.
10. NAME OF CONTRACTOR AND YEAR TO BE STAMPED AT EACH END OF WORK AND AT INTERVALS OF 300 FT.
11. CONCRETE SURFACE SHALL BE FREE OF SURFACE BLEMISHES OR VOIDS GREATER THAN 1/4". JOINTS AND EDGES SHALL BE CLEAN AND FREE OF EXCESS SPALLING OR VOIDS.
12. A 6" STRIP TO BE LOCATED BETWEEN RIGHT-OF-WAY LINE AND SIDEWALK FOR PLACEMENT OF PROPERTY PINS WHEN PLANTING STRIP OR RETENTION SWALES ARE PLACED BEHIND CURB AND GUTTER.

CITY OF LEWISTON, IDAHO
PUBLIC WORKS DEPARTMENT

CONCRETE SIDEWALK

APPROVED FOR PUBLICATION 8/22/13 City Engineer Date — DWG. NO. 2-8

M:\Standards\2008 – Standards\2_Concrete\Concrete Sidewalk.dwg

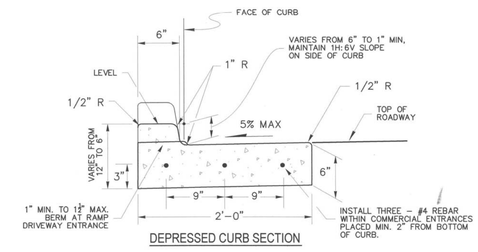

DEPRESSED CURB SECTION

AT DRIVEWAY ENTRANCES

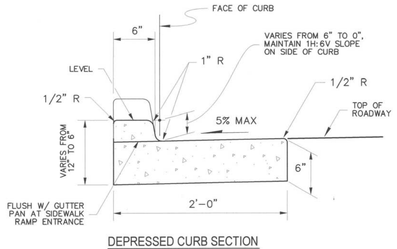

DEPRESSED CURB SECTION

AT SIDEWALK RAMPS

CITY OF LEWISTON, IDAHO
PUBLIC WORKS DEPARTMENT

DEPRESSED CURB SECTION

APPROVED FOR PUBLICATION 3-9-09 City Engineer Date — DWG. NO. 2-10

M:\Standards\2008 - Standards\2_Concrete\Depressed Curb Section.dwg

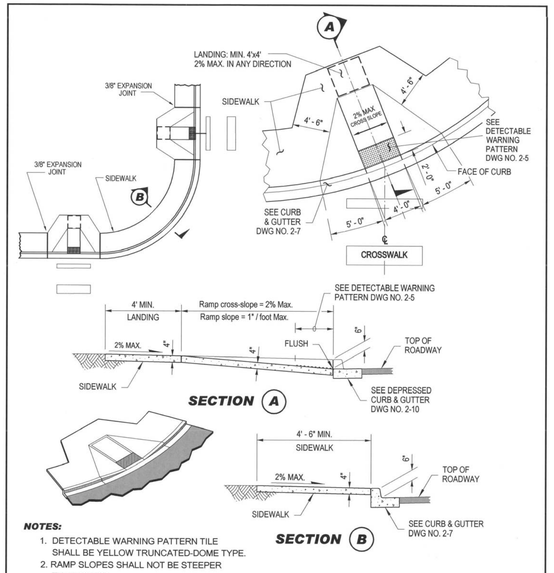

NOTES:

1. DETECTABLE WARNING PATTERN TILE SHALL BE YELLOW TRUNCATED-DOME TYPE.
2. RAMP SLOPES SHALL NOT BE STEEPER THAN 12H:1V.
3. A 4' x 4' MIN. CLEAR SPACE WITHIN THE CROSSWALK AREA AND 4' x 4' LANDING AREA AT TOP OF RAMP W/ 2% SLOPE IN ALL DIRECTIONS.
4. PLACEMENT OF DRAINAGE STRUCTURES, JUNCTION BOXES OR OTHER OBSTRUCTIONS WITHIN/ OR FRONT OF RAMP OR LANDING IS PROHIBITED.
5. THIS RAMP SHALL BE USED WITH HIGH BACK AND ROLLED CURB.

\Standards\2010-Standards\2-Concrete\Perp__Type1.dwg

CITY OF LEWISTON, IDAHO
PUBLIC WORKS DEPARTMENT

DOUBLE SIDEWALK RAMPS – TYPE 1

APPROVED FOR PUBLICATION 9/1/10 City Engineer Date — DWG. NO. 2-11

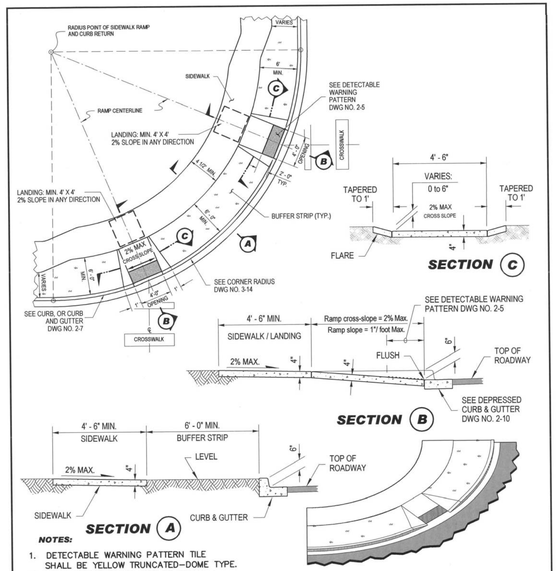

NOTES:

1. DETECTABLE WARNING PATTERN TILE SHALL BE YELLOW TRUNCATED-DOME TYPE.
2. RAMP SLOPES SHALL NOT BE STEEPER THAN 12H:1V.
3. A 4' x 4' LANDING AT THE TOP OF THE RAMP WITH 2% SLOPE IN ALL DIRECTIONS AND A 4' X 4' CLEAR SPACE WITHIN THE CROSSWALK AREA.
4. PLACEMENT OF DRAINAGE STRUCTURES, JUNCTION BOXES OR OTHER OBSTRUCTIONS WITHIN/ OR FRONT OF RAMP OR LANDING IS PROHIBITED.
5. THIS RAMP SHALL BE USED WITH HIGH BACK AND ROLLED CURB.

\Standards\2010-Standards\2-Concrete\Perpend__Type3.dwg

CITY OF LEWISTON, IDAHO
PUBLIC WORKS DEPARTMENT

SIDEWALK RAMP TYPE 3

APPROVED FOR PUBLICATION 9/1/10 City Engineer Date — DWG. NO. 2-13

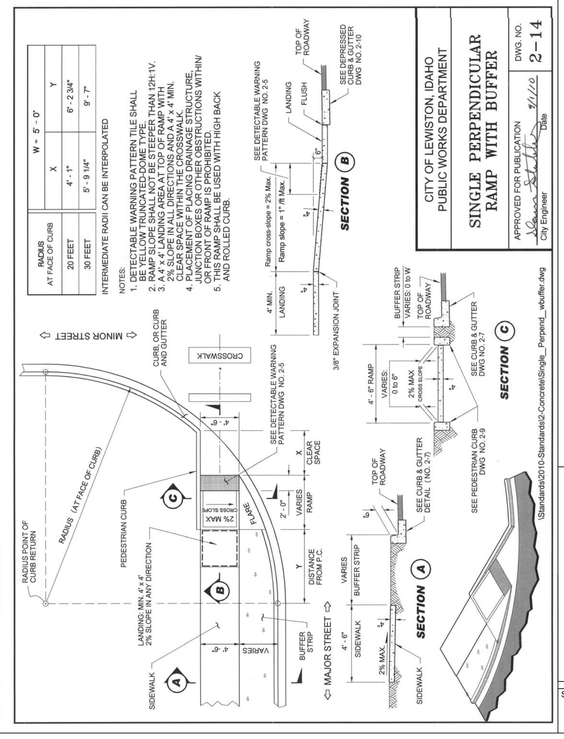

\Standards\2010-Standards\2-Concrete\Single__Perpend__wbuffer.dwg

CITY OF LEWISTON, IDAHO
PUBLIC WORKS DEPARTMENT

SINGLE PERPENDICULAR RAMP WITH BUFFER

APPROVED FOR PUBLICATION 9/1/10 City Engineer Date — DWG. NO. 2-14

REV NO	DATE	REVISION DESCRIPTION	CHECKED	APPD.

REGISTERED PROFESSIONAL ENGINEER, LAND SURVEYOR, AND CHARTERED PROFESSIONAL ENGINEER #2102 STATE OF IDAHO JOHN SHAMMEN 3/3/17

SCALE	SHEET SIZE D		
DRAWN BY MEE	CHECKED BY JSH		
DATE 03-03-17	JOB # 1650		
SHEET C23	DRAWING # 1650-C23		

PROJECT IIIA

THE ESTATES AT CANYON CREST - PHASE III/ PROJECT IIIA
STANDARD DETAILS
RPL DEVELOPMENT CO., INC.
LEWISTON, IDAHO

HEDCO

HAMMOND ENGINEERING & DEVELOPMENT CO.
528 BRYDEN AVENUE LEWISTON, IDAHO 83501
(208) 798-5422

SHEET C23

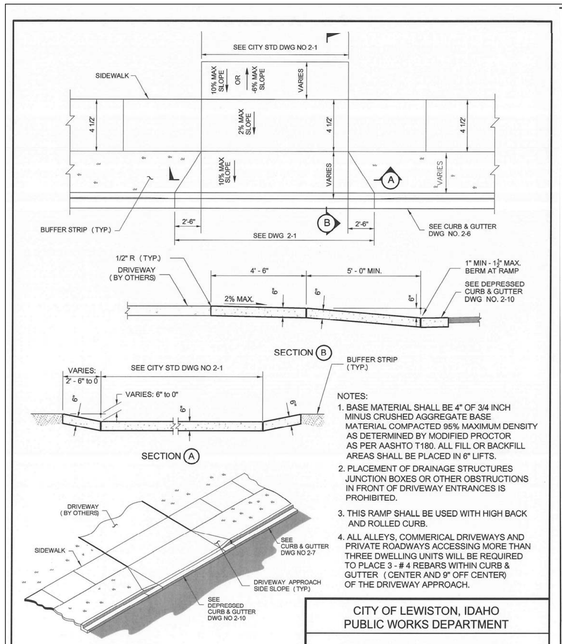

NOTES:

1. BASE MATERIAL SHALL BE 4" OF 3/4 INCH MINUS CRUSHED AGGREGATE BASE MATERIAL COMPACTED 95% MAXIMUM DENSITY AS DETERMINED BY MODIFIED PROCTOR AS PER AASHTO T180. ALL FILL OR BACKFILL AREAS SHALL BE PLACED IN 6" LIFTS.
2. PLACEMENT OF DRAINAGE STRUCTURES JUNCTION BOXES OR OTHER OBSTRUCTIONS IN FRONT OF DRIVEWAY ENTRANCES IS PROHIBITED.
3. THIS RAMP SHALL BE USED WITH HIGH BACK AND ROLLED CURB.
4. ALL ALLEYS, COMMERICAL DRIVEWAYS AND PRIVATE ROADWAYS ACCESSING MORE THAN THREE DWELLING UNITS WILL BE REQUIRED TO PLACE 3 - #4 REBARS WITHIN CURB & GUTTER (CENTER AND 9" OFF CENTER) OF THE DRIVEWAY APPROACH.

CITY OF LEWISTON, IDAHO
PUBLIC WORKS DEPARTMENT

DRIVEWAY APPROACH SPLIT APRON SIDEWALK

APPROVED FOR PUBLICATION — City Engineer — Date 2/26/13 — DWG. NO. 2-16

M:\Standards\2010-Standards\2-Concrete\Split__Apron__Sidewalk.dwg

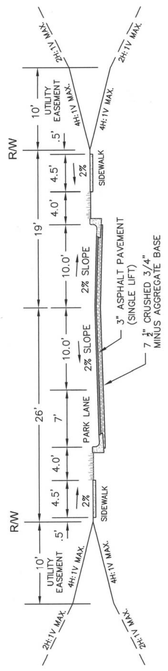

NOTES:

1. 45' RIGHT-OF-WAY WIDTH
2. 115' MAX.
3. MIN. 45' RADIUS CUL-DE-SAC
4. HIGH BACK AND CURB & GUTTER, ROLLED CURB ONLY WITH THE WRITTEN APPROVAL OF CITY ENGINEER
5. TWO - 10' TRAVEL LANES
6. ONE - 7' PARKING LANE
7. LOT SIZES MORE THAN 1/2 ACRE WILL REQUIRE PARKING ON BOTH SIDES.
8. SEE CUL-DE-SAC DWG NO. 3-7.
9. ORCHARDS DISTRICT ONLY: RIGHT-OF-WAY CAN BE REDUCED TO 38' AND ALL OR PARTIAL SIDEWALK REQUIREMENT MAYBE REMOVED WITH APPROVAL OF CITY ENGINEER AND WITH PAYMENT INTO IN-LIEU-OF CONSTRUCTION PROGRAM.
10. CITY ENGINEER MAY REQUIRE SOIL TEST AND/OR GEOTECHNICAL ENGINEERING EVALUATION TO VERIFY LOAD BEARING CAPACITY OF SUBGRADE.
11. TRAFFIC CALMING AND ENTRANCE FEATURES SHALL BE EVALUATED ON A CASE BY CASE BASIS; FINAL APPROVAL SHALL BE BY CITY ENGINEER.
12. ASPHALT PAVEMENT MAYBE WATER TESTED FOR PROPER DRAINAGE PRIOR TO FINAL APPROVAL.
13. CITY ENGINEER MAY REQUIRE CORING OF THE ASPHALT PAVEMENT TO VERIFY PAVEMENT THICKNESS OR DENSITY.
14. ANY VARIATION TO PROPOSED ROAD CROSS-SECTION MUST HAVE WRITTEN APPROVAL FROM CITY ENGINEER.
15. ALL TREE AND UTILITY PLACEMENT MUST MEET DWG NO 1-1.
16. A 6.5' STRIP TO BE LOCATED BEHIND THE SIDEWALK FOR PLACEMENT OF PROPERTY PINS.

\Standards\2008-Standards\3_Streets\cul_de_sac_cross-section.dwg

CITY OF LEWISTON, IDAHO
PUBLIC WORKS DEPARTMENT

≤500' CUL-DE-SAC ROADWAY

APPROVED FOR PUBLICATION — City Engineer — Date 2-17-09 — DWG. NO. 3-6

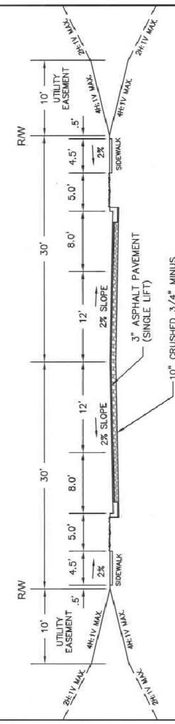

NOTES:

1. 60' RIGHT OF WAY WIDTH
2. 8% GRADE MAX.
3. 200' CENTERLINE RADIUS (MIN.) — 150' MIN. WITH 25' RADIUS IF CURVE IS SUPERELEVATED (REFER TO AASHTO)
4. HIGH BACK CURB ONLY
5. THE PLANTING STRIP SHALL BE MAINTAINED BY THE ADJACENT PROPERTY OWNERS
6. CITY ENGINEER MAY REQUIRE SOIL TEST AND/OR GEOTECHNICAL ENGINEERING EVALUATION TO VERIFY LOAD BEARING CAPACITY OF SUBGRADE.
7. ONE 10' TRAVEL LANE WITHIN RIGHT-OF-WAY WIDTH (5' EACH SIDE OF CENTERLINE WHEN BIKE LANES ARE REQUIRED)
8. TRAFFIC CALMING AND ENTRANCE FEATURES SHALL BE EVALUATED ON A CASE BY CASE BASIS; FINAL APPROVAL SHALL BE BY CITY ENGINEER.
9. ASPHALT PAVEMENT MAYBE WATER TESTED FOR PROPER DRAINAGE PRIOR TO FINAL APPROVAL.
10. CITY ENGINEER MAY REQUIRE CORING OF THE ASPHALT PAVEMENT TO VERIFY PAVEMENT THICKNESS OR DENSITY.
11. ANY VARIATION TO PROPOSED ROAD CROSS-SECTION MUST HAVE WRITTEN APPROVAL FROM CITY ENGINEER.
12. ALL TREE AND UTILITY PLACEMENT MUST MEET DWG NO. 1-1.
13. A 6.5' STRIP TO BE LOCATED BEHIND THE SIDEWALK FOR PLACEMENT OF PROPERTY PINS.

M:\Standards\2010-Standards\3-Streets\Residential__Collector.dwg

CITY OF LEWISTON, IDAHO
PUBLIC WORKS DEPARTMENT

RESIDENTIAL COLLECTOR

APPROVED FOR PUBLICATION — City Engineer — Date 2-17-09 — DWG. NO. 3-9

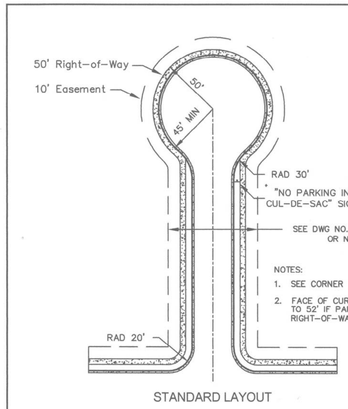

NOTES:

1. SEE CORNER RADIUS DWG NO. 3-15.
2. FACE OF CURB RADIUS NEEDS TO BE INCREASED TO 52' IF PARKING IS NEEDED IN CUL-DE-SAC AND RIGHT-OF-WAY WIDTH NEEDS TO BE INCREASED TO 62'.

STANDARD LAYOUT

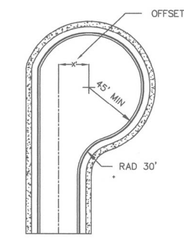

OFFSET BULB OPTION

M:\Standards\2008-Standards\3__Street3-7.dwg

CITY OF LEWISTON, IDAHO
PUBLIC WORKS DEPARTMENT

CUL-DE-SAC DESIGN

APPROVED FOR PUBLICATION — City Engineer — Date 2-5-09 — DWG. NO. 3-7

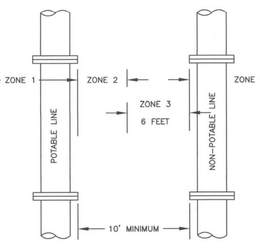

HORIZONTAL REQUIREMENTS:

ZONE 1: MORE THAN 10 FEET APART
NO SPECIAL REQUIREMENTS

ZONE 2: FROM 6 TO 10 FEET APART
A. No special requirements for service lines.
B. Potable and non-potable mains separated by at least 6 feet at outside walls and
i. Potable mains higher in elevation than the non-potable mains and
ii. Non-potable mains constructed to with potable water class pipe and pressure tested for water tightness.

ZONE 3: CLOSER THAN 6 FEET APART
NOT ALLOWED

VERTICAL REQUIREMENTS:

ZONE 1: POTABLE LINE 18" OVER NON-POTABLE LINE
Potable water and non-potable mains and service lines must be separated by at least 18 inches and
One full, uncut length of non-potable pipe must be centered on the crossing so that the joints are as far as possible from the crossing.

ZONE 2: POTABLE LINE < 18" OVER NON-POTABLE LINE
One full, uncut length of non-potable pipe must be centered on the crossing so that the joints are as far as possible from the non-potable line and either a or b
a) Non-potable line must be constructed to potable water pipe standards and pressure tested for water tightness for a horizontal distance of ten feet on both sides of the crossing.
b) Non-potable or potable line must be cased in a larger diameter carrier pipe for a horizontal distance of ten feet on both sides of the crossing, with no joints.

ZONE 3: POTABLE WATER < 18" UNDER NON-POTABLE LINE
Same requirements as Zone 2 except the non-potable line must also be supported above the crossing to prevent settling.

ZONE 4: POTABLE WATER 18" UNDER NON-POTABLE LINE
Same requirements as Zone 1 except the non-potable line must also be supported above the crossing to prevent settling.

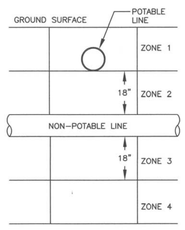

GENERAL NOTES:

1. Sewage force mains shall have at least ten feet of horizontal separation and eighteen inches of clearance from potable water mains. Zone 2 and 3 placements are prohibited.
2. Separation requirements also apply to potable and non-potable service lines controlled by the system owner and extending the main line to the property line, service meter, or cleanout.

CITY OF LEWISTON, IDAHO
PUBLIC WORKS DEPARTMENT

POTABLE & NON-POTABLE WATERLINE SEPARATION

APPROVED FOR PUBLICATION — City Engineer — Date 11-9-09 — DWG. NO. 4-1

M:\Standards\2010-Standards\4-Water\Potable Nonpotable.dwg

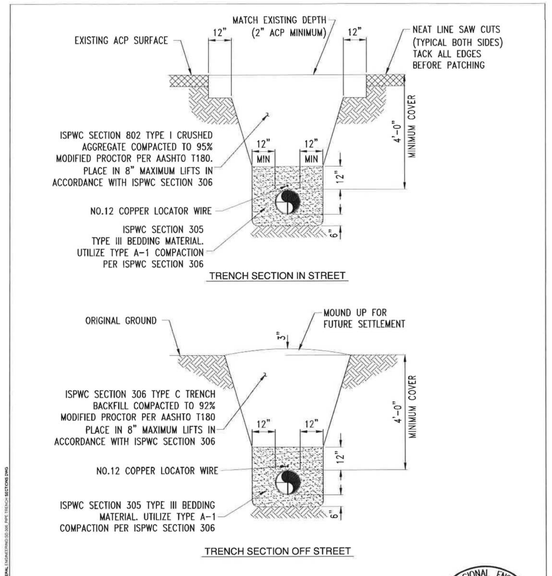

NOTES:

1. IF EXISTING SURFACE IS BITUMINOUS SURFACE TREATMENT, A 2 SHOT OIL-CHIP SURFACE SHALL EXTEND FULL WIDTH OF EXISTING PAVED AREA.
2. ACP = ASPHALT CONCRETE PAVEMENT

PROFESSIONAL ENGINEER REGISTERED 10958 STATE OF IDAHO CORY R. BAUNE 11-5-2015

JUB J-U-B ENGINEERS, INC.

SINGLE PIPE TRENCH SECTIONS
STANDARD DETAIL
LOID SD-306

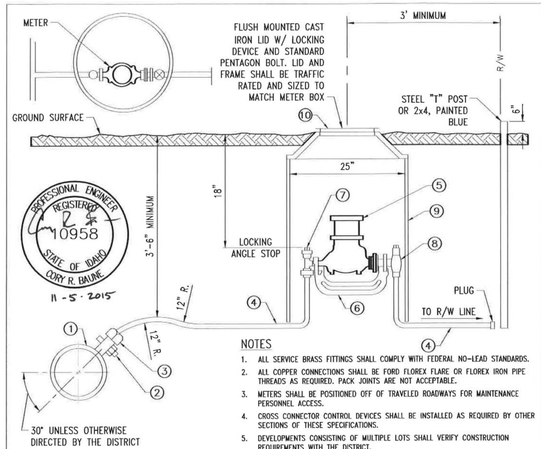

PROFESSIONAL ENGINEER REGISTERED 10958 STATE OF IDAHO CORY R. BAUNE 11-5-2015

NOTES

1. ALL SERVICE BRASS FITTINGS SHALL COMPLY WITH FEDERAL NO-LEAD STANDARDS.
2. ALL COPPER CONNECTIONS SHALL BE FORD FLOREX FLARE OR FLOREX IRON PIPE THREADS AS REQUIRED. PACK JOINTS ARE NOT ACCEPTABLE.
3. METERS SHALL BE POSITIONED OFF OF TRAVELED ROADWAYS FOR MAINTENANCE PERSONNEL ACCESS.
4. CROSS CONNECTOR CONTROL DEVICES SHALL BE INSTALLED AS REQUIRED BY OTHER SECTIONS OF THESE SPECIFICATIONS.
5. DEVELOPMENTS CONSISTING OF MULTIPLE LOTS SHALL VERIFY CONSTRUCTION REQUIREMENTS WITH THE DISTRICT.

EQUIPMENT NOTE	DESCRIPTION	MANUFACTURER	DETAIL			
			3/4"	1"	1 1/2"	2"
1	DOUBLE STRAP SERVICE SADDLE	ROMAC	202NS			
2	CORPORATION STOP IN TOP 1/4 OF PIPE	FORD	FS00 SERIES		FB500 SERIES	
3	CONNECTOR	FORD	LA21 SERIES			
4	ASTM B88 SEAMLESS COPPER SERVICE LINE	-	TYPE K ANNEALED			
5	WATER METER, 3/4" MINIMUM	SENSUS	IPERL, 100 FT3 READ		OMNI R2, 100 FT3 READ	
6	YOKE BAR	FORD	Y502	Y504	—	—
7	METER SETTER INLET VALVE	FORD	AV92 WITH PADLOCK WINGS			
8	METER SETTER OUTLET VALVE	FORD	HHA92 DUAL CHECK VALVE			
9	METER BOX	-	26" DEPTH 20" DIAMETER PVC 1120 PIP	24" DEPTH 24" DIAMETER PVC 1120 PIP, 80 PSI	30" DEPTH 17" X 30" OLDCASTLE METER BOX MINUS MOUSE HOLES	
10	METER BOX COVER	-	TYLER 6150TR METER COVER	TYLER 6150TR WITH D&L 24" TO 20" ADAPTER RING	OLDCASTLE 17" X 30" COVER WITH READER HOLE	

JUB J-U-B ENGINEERS, INC.

METER INSTALLATION
STANDARD DETAIL
LOID SD-401

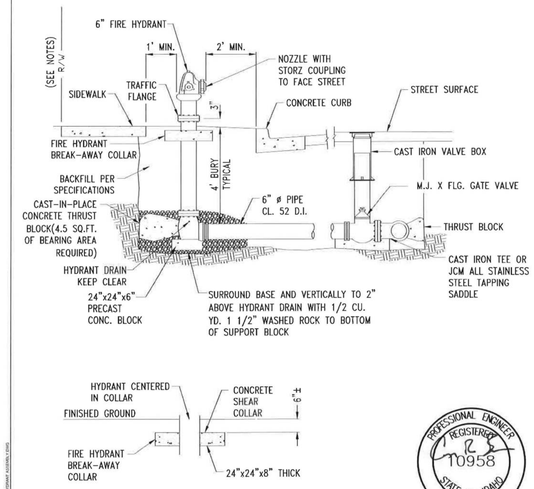

NOTES:

1. EACH HYDRANT IS TO BE RESTRAINED BY MEAN THE VALVE TO HYDRANT LATERAL PIPE.
2. IN NO CASE SHALL HYDRANTS BE PLACED ON PRIVATE PROPERTY. THE ABOVE DIMENSIONS SHOULD BE CONSIDERED A GUIDE ONLY.
3. HYDRANT SHALL BE LOCATED 3 FT. MINIMUM FROM ANY OBSTACLE.
4. FIRE HYDRANT ON IRRIGATION MAINS SHALL BE PAINTED YELLOW. FIRE HYDRANT ON DOMESTIC MAINS SHALL BE PAINTED RED.

PROFESSIONAL ENGINEER REGISTERED 10958 STATE OF IDAHO CORY R. BAUNE 11-5-2015

JUB J-U-B ENGINEERS, INC.

FIRE HYDRANT ASSEMBLY
STANDARD DETAIL
LOID SD-404

REV NO.	DATE	REVISION DESCRIPTION	CHECKED	APPD.

PROFESSIONAL ENGINEER REGISTERED #2102 STATE OF IDAHO JOHN M. SHAMMEN 5/3/17

SCALE	SHEET SIZE D
DRAWN BY	MEE
CHECKED BY	JSH
DATE	03-03-17
JOB #	1650
SHEET	C24
DRAWING #	1650-C24

PROJECT IIIA

THE ESTATES AT CANYON CREST - PHASE III/ PROJECT IIIA
STANDARD DETAILS
RPL DEVELOPMENT CO., INC.
LEWISTON, IDAHO

HEDCO
HAMMOND ENGINEERING & DEVELOPMENT CO.
528 BRYDEN AVENUE LEWISTON, IDAHO 83501
(208) 798-5422

SHEET C24

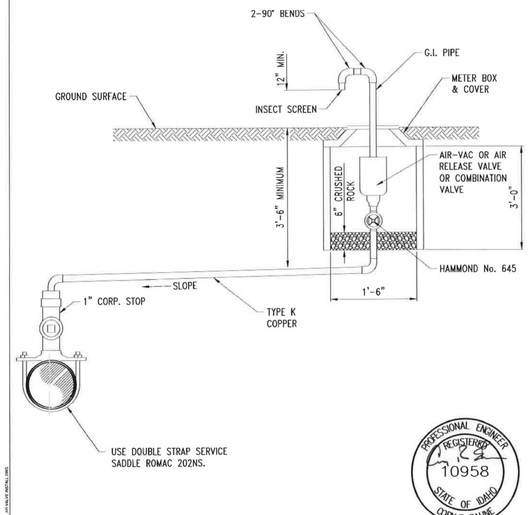

PROFESSIONAL ENGINEER REGISTERED 10958 STATE OF IDAHO CORY R. BAUNE

11-5-2015

NOTES:

1. SIZE OF PIPES, CORPORATION STOPS, ETC. TO BE COMPATIBLE W/ SIZE OF VALVE SPECIFIED.
2. PLACEMENT OF VALVE SHALL BE OFF OF TRAVELLED ROADWAYS & ACCESSIBLE TO MAINTENANCE PERSONNEL.
3. 6 INCH MAIN OR LESS, 1 INCH PIPE AND AIR-VAC VALVE, GREATER THAN 6 INCH MAIN, 2 INCH PIPE AND AIR-VAC VALVE.

JUB ENGINEERS, INC.

AIR VALVE INSTALLATION
STANDARD DETAIL
LOID SD-408

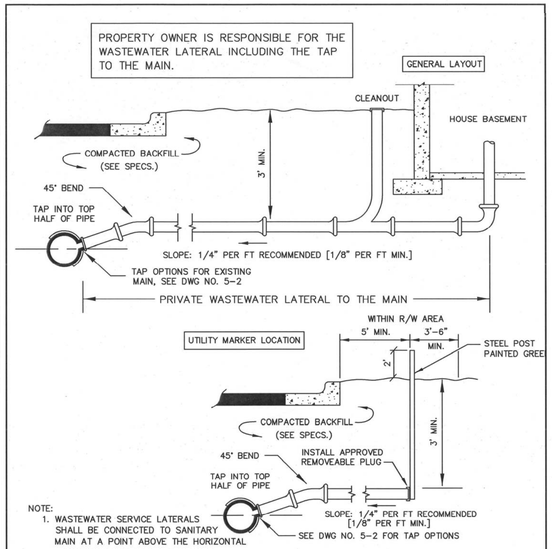

NOTE:

1. WASTEWATER SERVICE LATERALS SHALL BE CONNECTED TO SANITARY MAIN AT A POINT ABOVE THE HORIZONTAL CENTERLINE OF THE PIPE BUT NOT DIRECTLY TO THE TOP OF THE MAIN.
2. ALL CONNECTIONS AND WASTEWATER LINES CONNECTING WITH THE PUBLIC SYSTEM SHALL BE WATERTIGHT AND NO LESS THAN 4" IN DIAMETER FOR ALL NEW CONNECTIONS EXCEPT FOR 2" DIAMETER PRESSURE CONNECTIONS TO GRAVITY MAINS.
3. FLOOR DRAINS SUBJECT TO BACK PRESSURE OR BASEMENT DRAINS LESS THAN 1' ABOVE THE NEAREST ADJACENT SEWER MANHOLE SHALL BE EQUIPPED WITH AN APPROVED BACKWATER VALVE (SEE CITY SEC. 36-43).

\Standards\2010-Standards\5-SanitarySS Service Connection.dwg

CITY OF LEWISTON, IDAHO
PUBLIC WORKS DEPARTMENT

WASTEWATER PRIVATE SERVICE CONNECTION

APPROVED FOR PUBLICATION 12/13/10 — City Engineer — Date — DWG. NO. 5-1

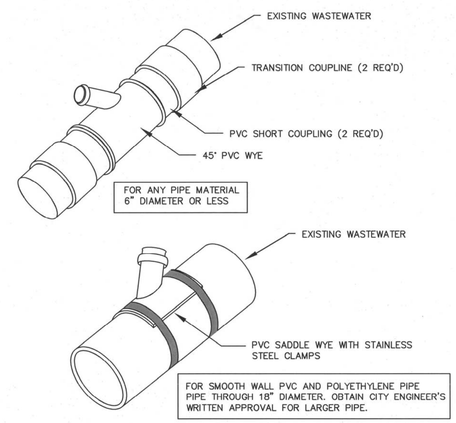

NOTES

1. WASTEWATER SERVICE LATERALS SHALL BE CONNECTED TO SANITARY MAIN AT A POINT ABOVE THE HORIZONTAL CENTERLINE OF THE PIPE BUT NOT DIRECTLY TO THE TOP OF THE MAIN.
2. FOR SANITARY MAIN PIPE OF 6" DIAMETER AND LARGER USE ROMAC STYLE 'CB' WASTEWATER SADDLE.

\Standards\2010-Standards\5-SanitarySewer\Wastewater Tap Options.dwg

CITY OF LEWISTON, IDAHO
PUBLIC WORKS DEPARTMENT

WASTEWATER SERVICE TAP OPTIONS DETAIL

APPROVED FOR PUBLICATION 12/13/10 — City Engineer — Date — DWG. NO. 5-2

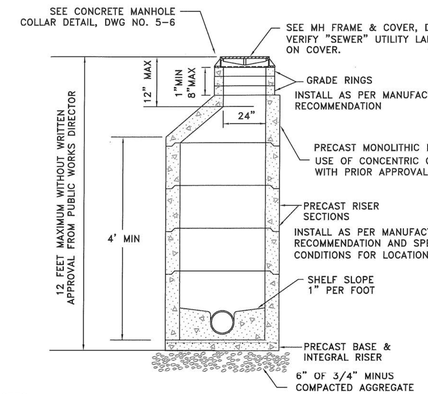

NOTES:

1. ALL UNITS TO MEET OR EXCEED THE REQUIREMENTS OF ASTM C478/AASHTO M199. JOINTS SHALL BE RUBBER GASKET CONFORMING TO ASTM C443 AND SHALL BE GROUTED FROM THE INSIDE. LIFT HOLES SHALL BE GROUTED FROM THE OUTSIDE AND INSIDE OF THE MANHOLE.
2. PRECAST BASES SHALL BE FURNISHED WITH CUTOUTS OR KNOCKOUTS. KNOCKOUTS SHALL HAVE A WALL THICKNESS OF 2" MINIMUM
3. CONNECTION TO MANHOLE SHALL BE MADE USING RESILIENT CONNECTOR CONFORMING TO ASTM C-923 SUCH AS KOR-N-SEAL, A-LOK OR APPROVED EQUAL.
4. RISERS, UNIT SECTIONS AND THE FRAME SHALL NOT BE MORE THAN ONE INCH OUT OF ALIGNMENT WITH THE MANHOLE BASE; PIPES SHALL BE FLUSH WITH INSIDE EDGE OF MANHOLE.
5. PRESSURE TESTING IS REQUIRED FOR ALL INSTALLATIONS.
6. SEE DWG NO 5-6 FOR CONCRETE MANHOLE COLLAR.
7. MAXIMUM SPACING BETWEEN MANHOLES IS 400 FEET.

\Standards Dwgs - City\Current Stds\3-SanitarySewer\SS MH Type 1.dwg

CITY OF LEWISTON, IDAHO
PUBLIC WORKS DEPARTMENT

WASTEWATER TYPE 1 MANHOLE

APPROVED FOR PUBLICATION 11/21/11 — City Engineer — Date — DWG. NO. 5-3

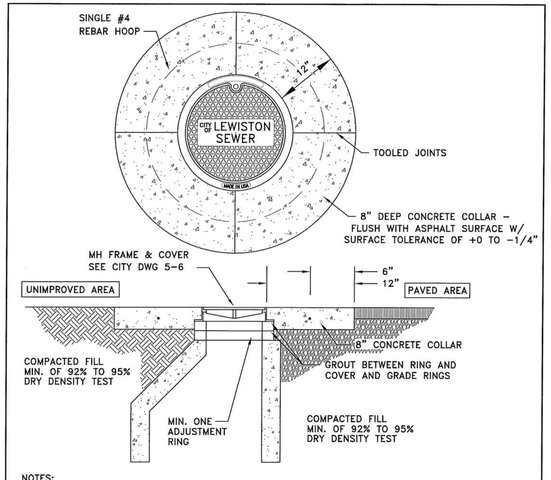

NOTES:

1. A CIRCULAR-SHAPED CONCRETE COLLAR IS REQUIRED ON ALL INSTALLATIONS; IN BOTH PAVED OR UNIMPROVED AREAS. INSTALL A 8" THICK CONCRETE COLLAR THAT SHALL BE FLUSH WITH THE ASPHALT SURFACE WITH A SURFACE TOLERANCE OF +0 TO -1/4".
2. CONCRETE SHALL BE 3,000 PSI MIN. AT 28 DAYS, WATER/CEMENT RATIO SHALL BE 0.5, 3" MAX. SLUMP AND 3% TO 6% ENTRAINED AIR WITH ONE #4 REBAR HOOP. FIBER-REINFORCED CONCRETE (ADDED PER MANUFACTURER'S RECOMMENDATIONS) MAY BE USED IN LIEU OF #4 REBAR.
3. ALL EDGES WILL BE SEALED WITH CSSI OR APPROVED EQUAL; ALL TOP EDGES WILL BE TACKED AND SAND SEALED.
4. UTILITY FRAMES AND LIDS ARE PREFERRED OUTSIDE OF WHEEL PATH, WHERE POSSIBLE.

SIMILAR TO CITY STD NO. 6-4

...\5-SanitarySewer\SS MH Collar.dwg

CITY OF LEWISTON, IDAHO
PUBLIC WORKS DEPARTMENT

WASTEWATER CONCRETE MANHOLE COLLAR

APPROVED FOR PUBLICATION 1/27/15 — City Engineer — Date — DWG. NO. 5-6

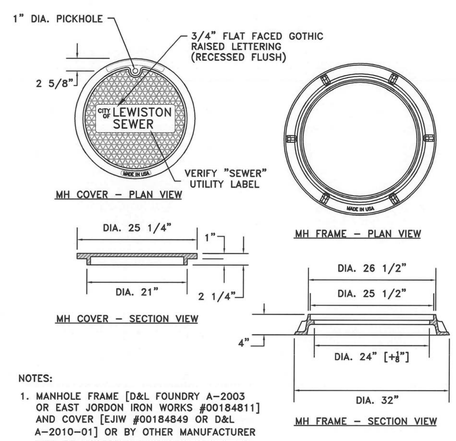

NOTES:

1. MANHOLE FRAME [D&L FOUNDRY A-2003 OR EAST JORDON IRON WORKS #00184811] AND COVER [EJIW #00184849 OR D&L A-2010-01] OR BY OTHER MANUFACTURER WILL BE ACCEPTABLE ONLY WITH WRITTEN APPROVAL FROM PUBLIC WORKS DEPT.; VERIFY "SEWER" UTILITY LABEL LETTERING ON COVER.
2. COVER MATERIAL SPECIFICATION GRAY IRON (ASTM A48 CL35B)
3. IN AREAS OF HIGH STORMWATER INFILTATION, LIDS SHALL HAVE GASKETED AND BOLTED.

\Standards\2010-Standards\5-SanitarySewer\MH Frame_Cover.dwg

CITY OF LEWISTON, IDAHO
PUBLIC WORKS DEPARTMENT

WASTEWATER MANHOLE FRAME AND COVER

APPROVED FOR PUBLICATION 11/11/10 — City Engineer — Date — DWG. NO. 5-7

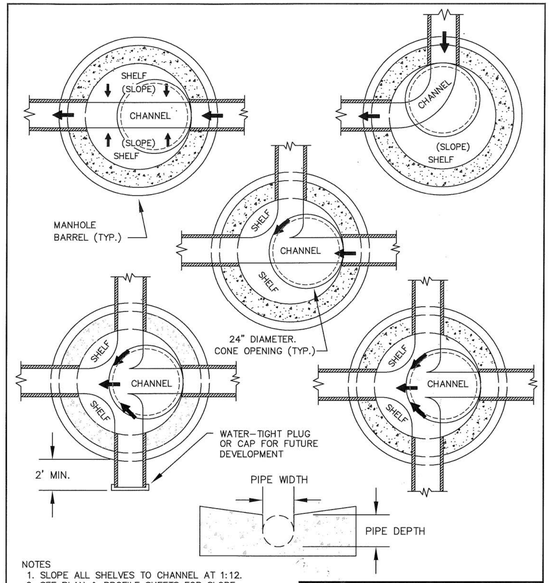

NOTES

1. SLOPE ALL SHELVES TO CHANNEL AT 1:12.
2. SEE PLAN & PROFILE SHEETS FOR SLOPE OF CHANNEL.
3. FOR PIPES OF DIFFERENT SIZES, THE TOP OF PIPE (CROWN) SHALL BE AT THE SAME ELEVATION.
4. OFFSET CONE 24" DIAMETER OPENING CENTERED OVER UPSTREAM PIPE INVERT.

..\5-SanitarySewer\Channel Detail.dwg

CITY OF LEWISTON, IDAHO
PUBLIC WORKS DEPARTMENT

WASTEWATER MANHOLE CHANNEL DETAIL

APPROVED FOR PUBLICATION 9-22-15 — City Engineer — Date — DWG. NO. 5-8

GENERAL NOTES FOR STORMWATER SYSTEMS

1. ALL WORK SHALL CONFORM TO CURRENT 'IDAHO STANDARDS FOR PUBLIC WORKS CONSTRUCTION' (ISPWC) SPECIFICATIONS AND THE CITY OF LEWISTON STANDARDS AND SPECIFICATIONS. IN THE CASE OF CONFLICT, CITY STANDARDS SHALL PREVAIL. THE 'LEWISTON STORMWATER POLICY AND DESIGN MANUAL' DEFINES THE POLICIES, MINIMUM STANDARDS, REQUIREMENTS, AND PROCEDURES FOR THE DESIGN, CONSTRUCTION, AND MAINTENANCE OF PRIVATE STORMWATER SYSTEMS.
2. ANY REPAIR, MAINTENANCE OR ALTERATION OF A PUBLIC STORM LINE OR DRAINAGE MUST BE APPROVED BY CITY ENGINEER.
3. THE CONTRACTOR MUST SECURE APPROVAL FROM THE CITY ENGINEER PRIOR TO ADDING OR REMOVING FILL BACKFILL OVER PUBLIC STORM DRAIN MAINLINE.
4. THE ENGINEERING INSPECTOR SHALL BE NOTIFIED AT LEAST FORTY-EIGHT (48) HOURS PRIOR TO COMMENCING WORK ON STORM DRAINS.
5. ALL PUBLIC STORM DRAIN LINES SHALL BE VIDEOTAPED AND SUBMITTED TO THE PUBLIC WORKS DEPARTMENT [AS PER PUBLIC WORKS POLICY NO. 2012-2] AND APPROVAL PRIOR TO PAVING. CITY SHALL HAVE FOURTY-EIGHT (48) HOURS FOR REVIEW.
6. ALL MANHOLES AND CATCH BASINS SHALL BE INSPECTED TWICE BY THE ENGINEERING INSPECTOR - ONCE PRIOR TO BACKFILL AND THEN PRIOR TO ACCEPTANCE OF IMPROVEMENTS. CALL PWD MAIN OFFICE (208) 746-1316 FOR INSPECTION SCHEDULING.
7. CLOSED CONDUITS (OR PIPELINES) FOR STORMWATER CONVEYANCE IN THE CITY'S STORMWATER SYSTEM MUST BE A MINIMUM OF 12 INCH DIAMETER. THE PIPE MATERIAL MAY BE PLASTIC, STEEL, REINFORCED CONCRETE OR AN APPROVED MATERIAL.
8. MINIMUM PIPE SLOPE SHALL BE 0.5% AND MINIMUM DESIGN VELOCITY WHEN FLOWING FULL SHALL BE NOT LESS THAN 2 FEET PER SECOND AND MAXIMUM VELOCITY SHOULD NOT BE MORE THAN 8 FEET PER SECOND.
9. JUNCTIONS OF 3 OR MORE PIPES, CHANGES IN ALIGNMENT, SLOPE AND/OR CHANGES IN PIPE DIAMETER SHALL BE MADE ONLY AT CATCH BASINS OR MANHOLES.
10. STEEP SLOPE INSTALLATION SHALL BE INSTALLED AS PER MANUFACTURES PIPE SPECIFICATIONS.
11. MANHOLE SHALL BE INSTALLED AT THE END OF EACH LINE, AT ALL CHANGE IN SIZE OR ALIGNMENT, AT DISTANCE NOT GREATER THAN 400 FEET OR AT CITY ENGINEER'S REQUIRED SPACING. ALL OTHER CHANGES IS SPACING MUST HAVE WRITTEN APPROVAL FROM PUBLIC WORKS DEPARTMENT.
12. LOCATING WIRE SHALL BE INSTALLED WITH ALL PUBLIC STORM PIPE INSTALLATIONS. SEE CITY DWG 1-8, 'IDENTIFYING TAPE DETAIL'.
13. CATCH BASINS AND MANHOLES SHALL BE ACCESSIBLE TO VEHICLES AND EQUIPMENT FOR MAINTENANCE AND BE WITHIN RIGHT-OF-WAY OF A MINIMUM EASEMENT WIDTH OF 20 FEET. PROPOSED ACCESS ROUTE MUST BE APPROVED BY CITY ENGINEER. MAINTENANCE ACCESS ROUTES THAT DO NOT FOLLOW THE STORMLINE MUST HAVE A MINIMUM 12' EASEMENT.

\Standards Dwgs - City\Current Stds\6-StormSewer\General__Notes__stm.dwg

CITY OF LEWISTON, IDAHO
PUBLIC WORKS DEPARTMENT

STORMWATER SYSTEM GENERAL NOTES

APPROVED FOR PUBLICATION 11/21/16 — City Engineer — Date — DWG. NO. 6-1

REV NO.	DATE	REVISION DESCRIPTION	CHECKED	APPD.

REGISTERED PROFESSIONAL ENGINEER #21021 STATE OF IDAHO JOHN SHAMMEN 3/3/17

SCALE	SHEET SIZE D	CHECKED BY JSH	JOB # 1650	DRAWING # 1650-C25
DRAWN BY MEE	DATE 03-03-17	SHEET C25		

THE ESTATES AT CANYON CREST - PHASE III/ PROJECT IIIA
STANDARD DETAILS
RPL DEVELOPMENT CO., INC.
LEWISTON, IDAHO

HEDCO
HAMMOND ENGINEERING & DEVELOPMENT CO.
528 BRYDEN AVENUE LEWISTON, IDAHO 83501
(208) 798-5422

SHEET C25

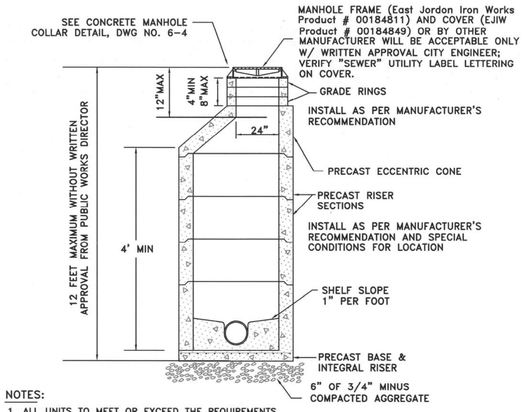

NOTES:

1. ALL UNITS TO MEET OR EXCEED THE REQUIREMENTS OF ASTM C478/AASHTO M199. JOINTS SHALL BE RUBBER GASKET CONFORMING TO ASTM C443 AND SHALL BE GROUTED FROM THE INSIDE. LIFT HOLES BE GROUTED FROM THE OUTSIDE AND INSIDE OF THE MANHOLE.
2. PRECAST BASES SHALL BE FURNISHED WITH CUTOUTS OR KNOCKOUTS. KNOCKOUTS SHALL HAVE A WALL THICKNESS OF 2" MINIMUM
3. CONNECTION TO MANHOLE SHALL BE MADE USING RESILIENT CONNECTOR CONFORMING TO ASTM C-923 SUCH AS KOR-N-SEAL, A-LOK OR APPROVED EQUAL. HAVE A WALL THICKNESS OF 2" MINIMUM
4. USE A MINIMUM OF 1/2" OF NON-SHRINK GROUT BETWEEN RISERS, CONE AND FRAME.
5. RISERS, UNIT SECTIONS AND THE FRAME SHALL NOT BE MORE THAN ONE INCH OUT OF ALIGNMENT WITH THE MANHOLE BASE; PIPES SHALL BE FLUSH WITH INSIDE EDGE OF MANHOLE.
6. SEE DWG NO 6-4 FOR CONCRETE MANHOLE COLLAR.

\Standards\2010-Standards\6-StormSewer\MH Type 1.dwg

CITY OF LEWISTON, IDAHO
PUBLIC WORKS DEPARTMENT

STORMWATER
TYPE 1 MANHOLE

APPROVED FOR PUBLICATION
City Engineer 12/13/10 Date
DWG. NO. 6-2

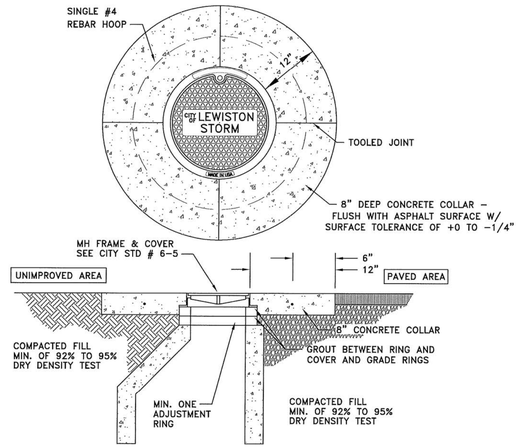

NOTES:

1. A CIRCULAR-SHAPED CONCRETE COLLAR IS REQUIRED ON ALL INSTALLATIONS; IN BOTH PAVED OR UNIMPROVED AREAS. INSTALL A 8" THICK CONCRETE COLLAR THAT SHALL BE FLUSH WITH THE ASPHALT SURFACE WITH A SURFACE TOLERANCE OF +0 TO -1/4".
2. CONCRETE SHALL BE 3,000 PSI MIN. AT 28 DAYS, WATER/CEMENT RATIO SHALL BE 0.5, 3" MAX. SLUMP AND 3% TO 6% ENTRAINED AIR WITH ONE #4 REBAR HOOP. FIBER-REINFORCED CONCRETE (ADDED PER MANFACTURER'S RECOMMENDATIONS) MAY BE USED IN LIEU OF #4 REBAR.
3. ALL EDGES WILL BE SEALED WITH CSSI OR APPROVED EQUAL; ALL TOP EDGES WILL BE TACKED AND SAND SEALED.
4. UTILITY FRAMES AND LIDS ARE PREFERRED OUTSIDE OF WHEEL PATH, WHERE POSSIBLE.

...\Current Stds\6-StormSewer\MH Collar.dwg

CITY OF LEWISTON, IDAHO
PUBLIC WORKS DEPARTMENT

CONCRETE
MANHOLE COLLAR

APPROVED FOR PUBLICATION
City Engineer 1/27/15 Date
DWG. NO. 6-4

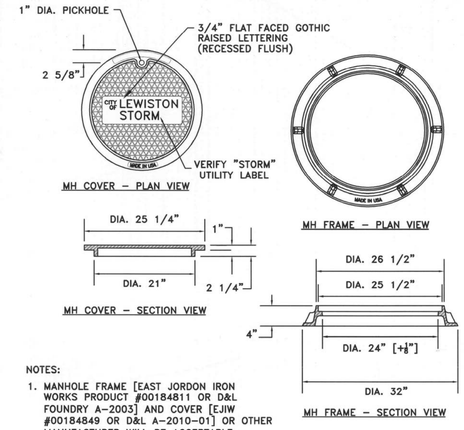

NOTES:

1. MANHOLE FRAME [EAST JORDON IRON WORKS PRODUCT #00184811 OR D&L FOUNDRY A-2003] AND COVER [EJIW #00184849 OR D&L A-2010-01] OR OTHER MANUFACTURER WILL BE ACCEPTABLE ONLY WITH WRITTEN APPROVAL FROM PUBLIC WORKS DEPT.; VERIFY "STORM" UTILITY LABEL LETTERING ON COVER.
2. COVER MATERIAL SPECIFICATION GRAY IRON (ASTM A48 CL35B)

\Standards\2010-Standards\6-StormSewer\MH Frame_Cover.dwg

CITY OF LEWISTON, IDAHO
PUBLIC WORKS DEPARTMENT

STORMWATER
MANHOLE FRAME
AND COVER

APPROVED FOR PUBLICATION
City Engineer 12/13/10 Date
DWG. NO. 6-5

GENERAL NOTES FOR CATCH BASINS

1. ALL UNITS TO MEET OR EXCEED THE REQUIREMENTS OF ASTM C478/AASHTO M199.
2. ALL CURB INLET STRUCTURES SHALL HAVE A MINIMUM 12" SUMP WITH THREE 1 1/2" DIA. WEEP HOLES IN BASE AND MINIMUM OF 12" OF COMPACTED 5/8" MINUS UNDER BASE; CRUSHED AGGREGATE MATERIAL COMPACTED TO 95% MODIFIED PROCTOR AS PER AASHTO T180
3. A CATCH BASIN SHALL BE INSTALLED UPHILL TO EACH INTERSECTION CORNER RADIUS AND SPACED NO MORE THAN 400 FEET ALONG THE LENGTH OF THE STREET OR AT CITY ENGINEER'S REQUIRED SPACING. ADJUSTMENTS TO SPACING SHALL REQUIRE CALCULATIONS TO VERIFY THE CHANGES HAVE MET CITY SPECIFICATIONS.
4. PRECAST BASES SHALL BE FURNISHED WITH CUTOUTS OR KNOCKOUTS. KNOCKOUTS SHALL HAVE A WALL THICKNESS OF 2" MINIMUM.
5. ALL PIPES SHALL BE FLUSH WITH BASIN WALL AND SHALL BE MORTARED ALL AROUND.
6. USE CITY STD DWG NO. 6-7 FOR CATCH BASIN FRAME AND GRATE.
7. REDUCTION SLAB, RISERS, AND FRAME & GRATE SHALL NOT BE MORE THAN ONE INCH OUT OF VERTICAL ALIGNMENT WITH CATCH BASIN BASE.
8. MAXIMUM DEPTH FROM FINISHED GRADE TO PIPE INVERT IS 5 FEET.
9. USE A MINIMUM OF 1/2" NON-SHRINK GROUT BETWEEN RISERS, BASE, AND FRAME.
10. CURB INLET TO BE PLACED WITHIN A TOLERANCE OF 1/2" HORIZONTAL ALIGNMENT FROM CURB LINE.
11. SET GRATE 1" LOWER THAN PROPOSED FLOWLINE TO ENSURE POSITIVE DRAINAGE INTO CATCH BASIN. CURB FLOWLINE SHALL BE TRANSITION TO 3" ON EACH SIDE OF THE CATCH BASIN TO ADJUST FOR 1" DROP. GUTTER LIP AND TOP OF CURB ARE NOT TO BE DEPRESSED.

M:\Standards\2010-Standards\6-StormSewer\CB General-Notes.dwg

CITY OF LEWISTON, IDAHO
PUBLIC WORKS DEPARTMENT

STORMWATER
GENERAL CATCH BASIN
NOTES

APPROVED FOR PUBLICATION
City Engineer 12/13/10 Date
DWG. NO. 6-6

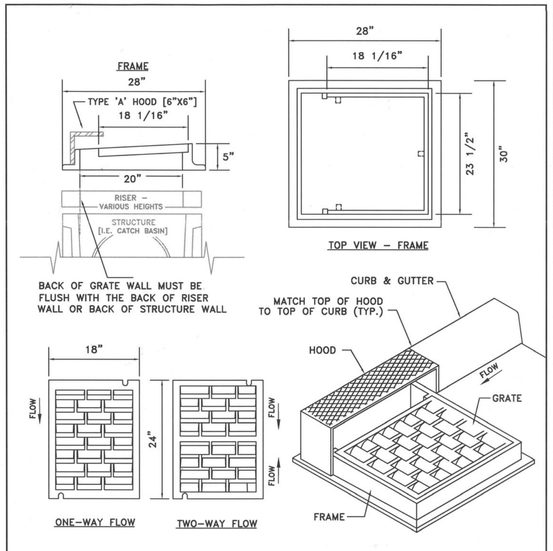

NOTES:

1. CURB INLET CATCH BASIN FRAME [D & L SUPPLY - PRODUCT 1-44434], GRATE AND HOOD OR BY OTHER MANUFACTURER WILL BE ACCEPTABLE ONLY WITH WRITTEN APPROVAL FROM PUBLIC WORKS DEPT.
2. COVER MATERIAL SPECIFICATION GRAY IRON (ASTM A48 CL35B)
3. SEE CITY DWG 6-6 'GENERAL NOTES FOR CATCH BASIINS'.

Standards\2010-Standards\6-StormSewer\CB Frame_Grate.dwg

CITY OF LEWISTON, IDAHO
PUBLIC WORKS DEPARTMENT

STORMWATER
CATCH BASIN FRAME
AND GRATE

APPROVED FOR PUBLICATION
City Engineer 11/21/13 Date
DWG. NO. 6-7

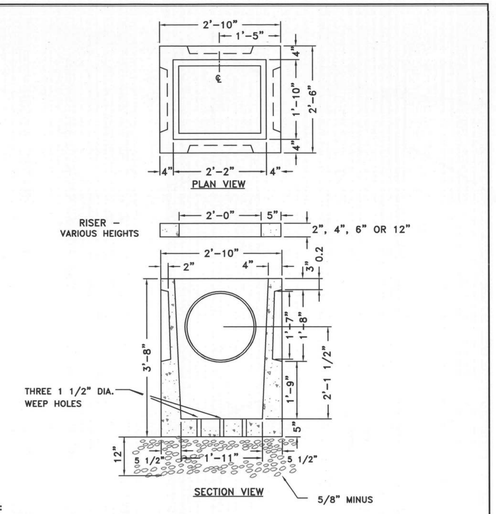

NOTES:

1. TYPICAL CATCH BASIN [WILBERT PRECAST PRODUCT #1827] AND RISERS [WILBERT PRECAST #1830 (FOR 12") OR #1831-2,4,6 (FOR 2", 4" OR 6")] OR BY OTHER MANUFACTURER WILL BE ACCEPTABLE ONLY WITH WRITTEN APPROVAL FROM PUBLIC WORKS DEPT.
2. SEE CITY DWG 6-6 'GENERAL NOTES FOR CATCH BASINS'.

M:\Standards\2010-Standards\6-StormSewer\CB Type_1.dwg

CITY OF LEWISTON, IDAHO
PUBLIC WORKS DEPARTMENT

STORMWATER
TYPE 1 CATCH BASIN

APPROVED FOR PUBLICATION
City Engineer 12/13/10 Date
DWG. NO. 6-8

REV NO.	DATE	REVISION DESCRIPTION	CHECKED	APPD.

ENGINEER, LAND SURVEYOR, AND PROFESSIONAL REGISTERED #2102 STATE OF IDAHO JOHN SHAMMEN 3/3/11

SCALE	SHEET SIZE D	CHECKED BY JSH	JOB # 1650	DRAWING # 1650-C26
DRAWN BY MEE	DATE 03-03-17	SHEET C26		

THE ESTATES AT CANYON CREST - PHASE III/ PROJECT IIIA
STANDARD DETAILS
RPL DEVELOPMENT CO., INC.
LEWISTON, IDAHO

HEDCO
HAMMOND ENGINEERING & DEVELOPMENT CO.
528 BRYDEN AVENUE LEWISTON, IDAHO 83501
(208) 798-5422

SHEET
C26