IDAHO TRANSPORTATION DEPARTMENT

PLAN AND PROFILE OF PROPOSED

BRYDEN AVENUE & 5TH STREET INTERSECTION
PROJECT NO. TR036

KEY NO. XXXXX
NEZ PERCE COUNTY

FEBRUARY, 2020

INDEX OF SHEETS	
SHEET NO.	DESCRIPTION
1	TITLE SHEET
2	SURVEY CONTROL
3	PROJECT CLEARANCE SUMMARY
4	MATERIALS SUMMARY
5–6	TYPICAL SECTIONS
7–10	DEMOLITION PLANS
11–14	ROADWAY PLANS
15	STORM SEWER SUMMARY
16	NORTH CURB RAMP DETAILS
17	SOUTH CURB RAMP DETAILS
18	NORTH DRIVEWAY DETAILS
19	SIGNAL MATERIALS SUMMARY
20	TRAFFIC SIGNAL PLAN
21	SIGNAL FIELD WIRING DIAGRAMS
22	VIDEO DETECTION DIAGRAM
23	PHASE & CONDUIT DIAGRAM
24	SIGN DETAILS
25	TRAFFIC SIGNAL MOUNTING DIAGRAM
26	EMERGENCY SIGNAL MATERIALS SUMMARY
27	EMERGENCY SIGNAL PLAN
28	EMERGENCY SIGNAL DIAGRAM
29	EMERGENCY SIGNAL MOUNTING DIAGRAM
30	SIGNIMG ERECTION SPECIFICATIONS
31–34	STRIPING AND SIGNING PLANS
35	INLET PROTECTION PLAN
36–73	STANDARD DRAWINGS

SCALES IN FEET

HORIZONTAL 20 10 0 20 40 FEET

VERTICAL 2.5 0 5 10 FEET

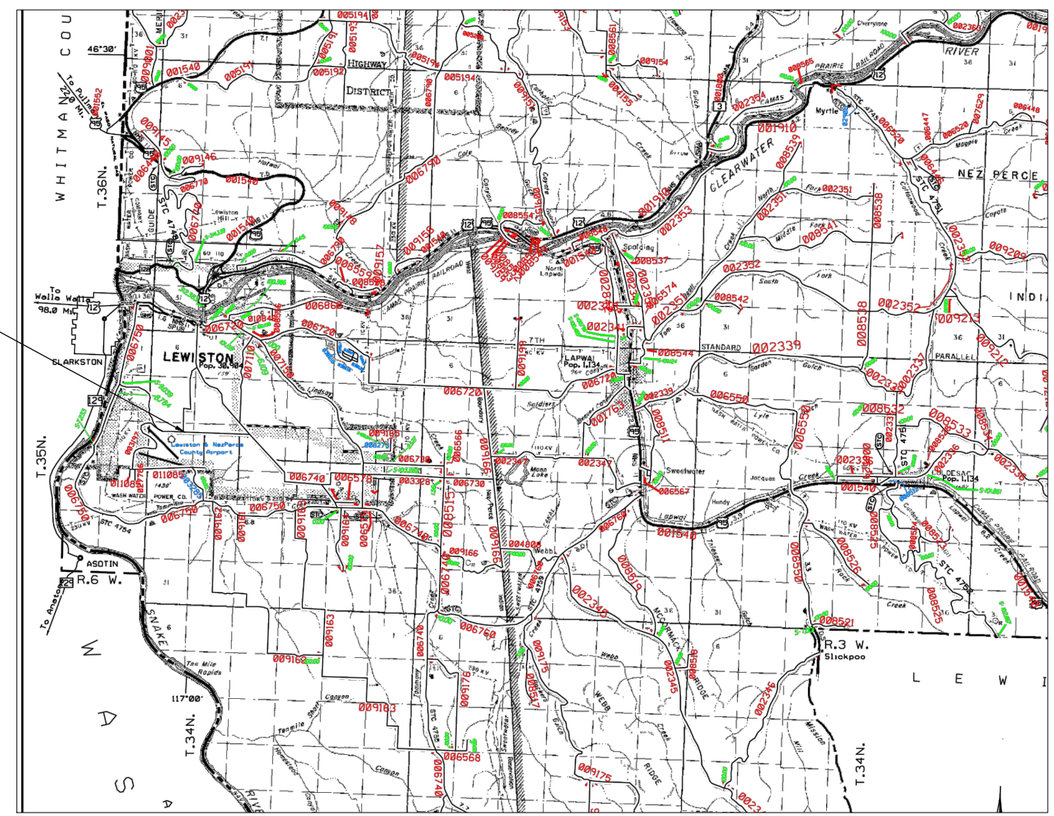

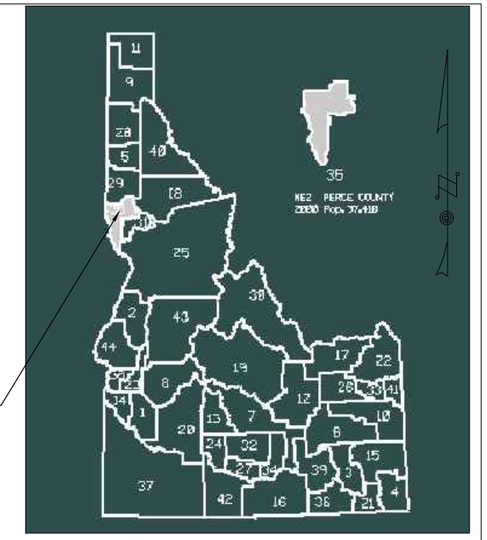

DESIGN DESIGNATION BRYDEN AVENUE	
ADT 2019	15,000
ADT 2040	19,600
DHV 2019	1,500
DHV 2040	1,960
D	50/50%
V	35 MPH
TRUCKS:	
ADT 2019	160
ADT 2040	200
DHV 2019	16
DHV 2040	20

DESIGN DESIGNATION 5TH STREET	
ADT 2019	7,600
ADT 2040	9,350
DHV 2019	760
DHV 2040	940
D	50/50%
V	25 MPH
TRUCKS:	
ADT 2019	80
ADT 2040	95
DHV 2019	8
DHV 2040	10

VICINITY MAP SCALE

1 0.5 0 1 2

MILES

POPULATIONS: 2000 U.S. CENSUS

REVISIONS	
DATE	DESCRIPTION

DESIGNED: WER

DESIGN CHECKED: GEH

DETAILED: WER

DRAWING APPROVED: PAO

SCALES SHOWN ARE FOR 11" X 17" PRINTS ONLY

CADD FILE NAME L18–051_1.dwg

DRAWING DATE: FEBRUARY, 2020

IDAHO TRANSPORTATION DEPARTMENT

TD&H ENGINEERING

PROJECT NO. TR036

TITLE: BRYDEN AVENUE & 5TH STREET INTERSECTION LEWISTON, IDAHO

English

COUNTY NEZ PERCE

KEY NUMBER XXXXX

SHEET 1 OF 73

PROFESSIONAL ENGINEER LICENSED 7654 02/28/2020 STATE OF IDAHO PHILLIP A. ODEGARD

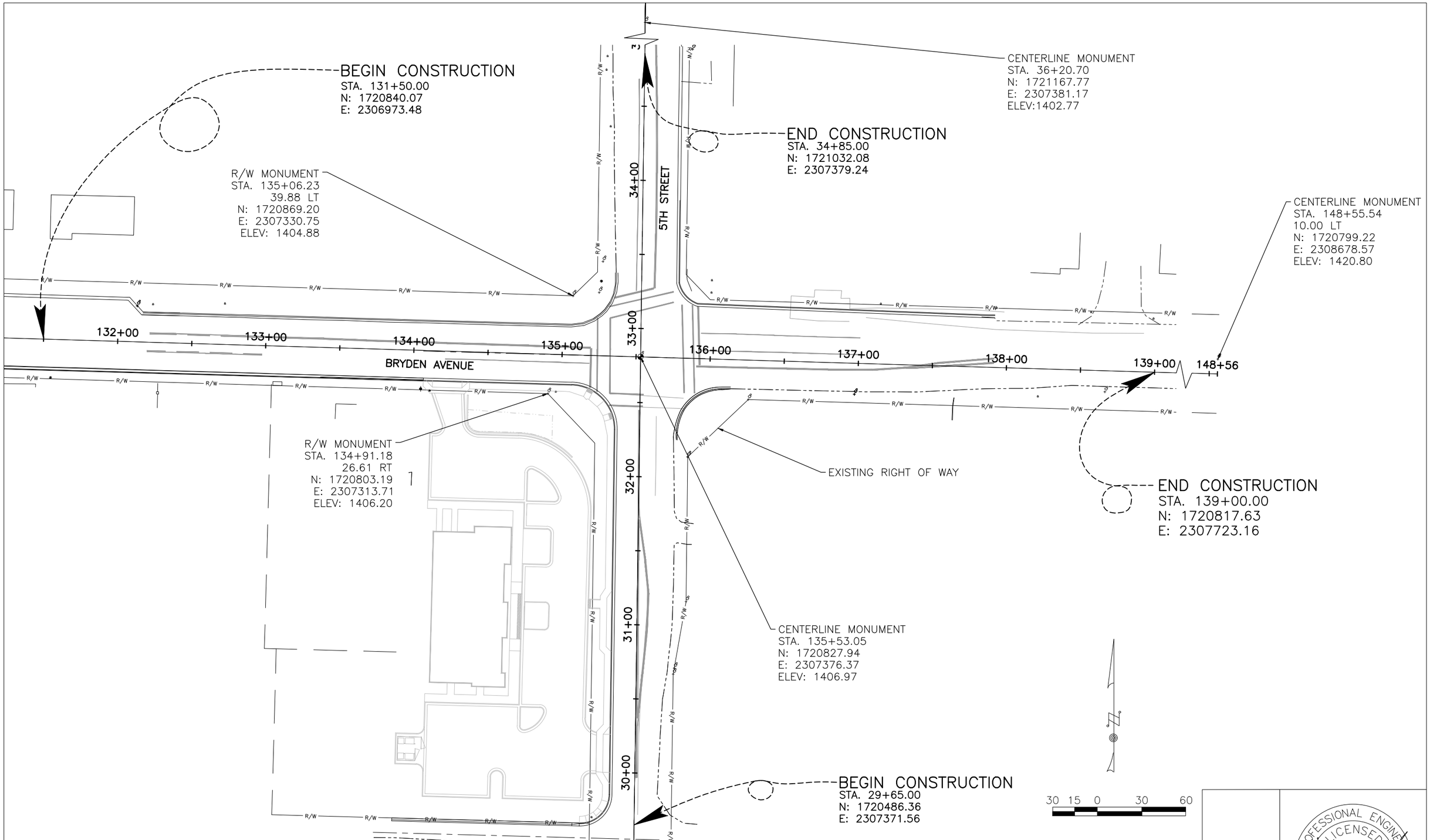

REVISIONS	
DATE	DESCRIPTION

DESIGNED: WER	SCALES SHOWN ARE FOR 11" X 17" PRINTS ONLY	IDAHO TRANSPORTATION DEPARTMENT
DESIGN CHECKED: GEH		
DETAILED: WER	CADD FILE NAME L18-051_2.dwg	
DRAWING APPROVED: PAO	DRAWING DATE: FEBRUARY, 2020	TD&H ENGINEERING

PROJECT NO.	SURVEY CONTROL	English
TR036	BRYDEN AVENUE & 5TH STREET INTERSECTION LEWISTON, IDAHO	COUNTY NEZ PERCE
		KEY NUMBER XXXXX
		SHEET 2 OF 73

PROFESSIONAL ENGINEER LICENSED 7654 02/28/2020 STATE OF IDAHO PHILLIP A. ODEGARD

CLEARANCES

	+ CLEARED UNDER PROJECT NO.	+ APPROVAL DATE
PROJECT STANDARDS		
CONCEPT APPROVAL ☐ AASHTO ☐ 3R ☐ 1R ☐ STATE		
☐ PM ☐ OTHER		
DESIGN EXCEPTIONS:	N/A	
	N/A	
PUBLIC HEARING WAIVER		
PUBLIC HEARING DATE (Latest hearing date held or scheduled for opportunity)	N/A	
DESIGN APPROVAL		
RECLAMATION PLAN APPROVAL NO(S)	N/A	
AIRPORT	N/A	
Land Survey Monument Search and Documentation (I.C.55–1613)	N/A	
R/W CERTIFICATE: Issued by ☐ HQ ☐ DISTRICT		
TRIBAL LANDS: ■ AGREEMENT REQUIRED ☐ SPECIAL PROVISIONS FOR CONTRACT PROPOSAL	N/A	
BRIDGE PS & E	N/A	
ENVIRONMENTAL DECISION: TYPE ■ CAT–EX ☐ FONSI ☐ ROD		
ENVIRONMENTAL RE–EVALUATION		

PERMITS

			+ EXPIRATION DATE
IDAHO DEPARTMENT OF WATER RESOURCES PERMIT NO(S)	N/A		
US ARMY CORPS OF ENGINEERS 404 PERMIT NO(S)	N/A		
OTHER	N/A		
DEQ SECTION 401 WATER QUALITY CERTIFICATION ☐ YES ■ NO			
NPDES GENERAL PERMIT/SWPPP REQUIRED: ☐ YES ■ NO			
THIRD PARTY INSPECTION REQUIRED ☐ YES ■ NO			
EROSION AND SEDIMENT CONTROL PLAN REQUIRED ■ YES ☐ NO			

AGREEMENTS (List Appropriate Name)

LOCAL: CITY S/L PD		
COUNTY	N/A	
HIGHWAY DISTRICT	N/A	
ROAD CLOSURE AND MAINTENANCE	N/A	
STATE/LOCAL CONSTRUCTION		
IRRIGATION DISTRICT(S): Crossing Agreement Required ☐ YES ■ NO (Signatures Required on either Structure Drawing or Bridge Sheet)	N/A	

UTILITIES: List all Utilities shown on plans	RETAIN & PROTECT	+ APPROVAL DATES: UTILITY HEARING WAIVER	+ APPROVAL DATES: AGREEMENT	+ AGREEMENT NO.
Co. Avista (Power and Gas)	☐			N/A
Co. L.O.I.D. (Irrigation and Water)	☐			N/A
Co. City of Lewiston (Sanitary Sewer)	☐			N/A
Co. Cable One	☐			N/A
Co. Century Link	☐			N/A
Co.	☐	N/A		N/A
Co.	☐	N/A		N/A

RAILROAD List all Railroads encroached upon	+ AGREEMENT FOR	+ AGREEMENT: EFFECTIVE DATE	+ AGREEMENT: NO.
Co.	N/A		
Co.	N/A		

ACCESS CONTROL DETERMINATION

FROM FORM ITD–606 (SUBMITTED FOR CHANGE ONLY)

Approved by Assistant Chief Engineer (Dev.): _____ Date

PROJECT NO.	LOCATION	TYPE OF CONTROL
	Bryden Avenue & 5th Street Intersection	City Standards

DESCRIPTION OF CONTROL TYPE: CITY OF LEWISTON

NOTES:

- Class A compaction is specified for the roadways.
- Subgrade separation geotextile shall be class III.

ESTIMATING BASIS:

Tack: CSS–1 diluted emulsified asphalt for tack @ 0.07 Gal./s.y.

Flexible Paving: Superpave hot asphalt (HMA) class SP–3 with performance graded (PG) 64–28 asphalt binder material at 6.0% by weight of mix, plus 0.5% anti–stripping additive by weight of asphalt cement. Plant mix shall be placed in two equal lifts.

Aggregate: ¾" aggregate for flexible pavement estimated at 153 pounds per cubic foot, including 6% asphalt cement with additives by weight of mix.

¾" base Type B at 146 pcf including 7% moisture.

+ ENTER "N/A" WHEN NOT APPLICABLE

++ LPA PROJECTS – DATE ENTERED BY ROADWAY DESIGN WHEN PROJECT SENT TO PS&E.

PROFESSIONAL ENGINEER LICENSED 7654 STATE OF IDAHO PHILLIP A. ODEGARD 02/28/2020

REVISIONS	
DATE	DESCRIPTION

DESIGNED: WER
DESIGN CHECKED: GEH
DETAILED: WER
DRAWING APPROVED: PAO

SCALES SHOWN ARE FOR 11" X 17" PRINTS ONLY

CADD FILE NAME L18–051_3.dwg

DRAWING DATE: FEBRUARY, 2020

IDAHO TRANSPORTATION DEPARTMENT

TD&H ENGINEERING

PROJECT NO. TR036

PROJECT CLEARANCE SUMMARY

BRYDEN AVENUE & 5TH STREET INTERSECTION LEWISTON, IDAHO

English

COUNTY NEZ PERCE

KEY NUMBER XXXXX

	SHEET NUMBER			7	8	9	10	11	12	13	14	31	32	33	34	35
ITEM NO.	STATION – STATION ITEM	UNIT	TOTAL	132+50.00 – 137+50.00	132+50.00 – 137+50.00	32+65.00 – 34+85.000	32+65.00 – 34+85.000	132+50.00 – 137+50.00	132+50.00 – 137+50.00	32+65.00 – 34+85.000	32+65.00 – 34+85.000	132+50.00 – 137+50.00	132+50.00 – 137+50.00	32+65.00 – 34+85.000	32+65.00 – 34+85.000	
201–010A	CLEARING & GRUBBING	AC	1													
203–005A	REMOVING OBSTRUCTIONS	LS	1		1											
203–015A	REMOVING BITUMINOUS PAVEMENT	SY	280	75	75	90	40									
203–060A	REMOVING CEMENT CONCRETE SIDEWALK	SY	305	185	100		20									
203–070A	REMOVING CURB & GUTTER	LF	560	315	200	5	40									
205–005A	EXCAVATION	CY	890	430	195	155	110									
212–020A	SILT FENCE	LF	825													825
212–095A	INLET PROTECTION	EA	6													6
303–022A	3/4" AGGREGATE TYPE B FOR BASE	TON	1185					610	265	175	135					
405–425A	SUPERPAVE HMA PAV PG 64–28	TON	875					315	280	165	115					
431–005A	COLD MILLING	SY	4990	1295	1895	1130	670									
605–025A	STORM SEWER PIPE (12")	LF	236					36	122		78					
605–500A	CATCH BASIN TYPE 1	EA	5					1	2		2					
614–015A	CONCRETE SIDEWALK (4")	SY	435					110	105	140	80					
614–020A	CONCRETE DRIVEWAY	SY	150					100		20	30					
614–025B	CURB RAMPS TYPE 2	SY	25						25							
614–025C	CURB RAMPS TYPE 3	SY	25						25							
615–492A	CEMENT CONCRETE CURB & GUTTER	LF	1030					300	260	290	180					
621–005A	SEEDING	SY	760													
630–020A	WORD, SYMBOL, ARROW PAV. MARKINGS	SF	395									75	205	40	75	
630–025A	LONGITUDINAL PAV. MARKING WATERBORN	LF	3545									1065	1180	620	680	
656–005A	TRAFFIC SIGNAL INSTALLATION	LS	1													
676–005A	RECORD OF EX. PAVEMENT MARKINGS	LS	1													
S600–005A	ADJUST VALVE COVER	EA	4						4							
S600–020A	FIRE HYDRANT ASSEMBLY	LS	1					1								
S605–005A	ADJUST MANHOLE/STORM DRAIN STRUCTURE	EA	6					2	2	2						
S605–006A	DRYWELL	EA	1								1					
S656–010A	MULTIPLE APP. VIDEO DETECTION SYS.	LS	1													
S656–015A	EMERGENCY FIRE STATION SIGNAL	LS	1													
S900–050A	CA (SIGNAL CONDUIT)	CA	1500													
S900–050B	CA (TRAFFIC CONTROL)	CA	2000													
S901–005A	REMOVE AND REPLACE SIGNS	EA	28									9	8	1	10	
S904–005A	SP EMERGENCY VEHICLE PREEMPT. SYS	LS	1													
S904–005B	TRAFFIC CONTROL	LS	1													
S913–005A	LANDSCAPE – RIVER ROCK	CY	75					20	15	30	10					
Z629–05A	MOBILIZATION (10%)	LS	1													

REVISIONS

DATE	DESCRIPTION

DESIGNED: WER
DESIGN CHECKED: GEH
DETAILED: WER
DRAWING APPROVED: PAO

SCALES SHOWN ARE FOR 11" X 17" PRINTS ONLY

CADD FILE NAME L18–051_4.dwg

DRAWING DATE: FEBRUARY, 2020

IDAHO TRANSPORTATION DEPARTMENT

TD&H ENGINEERING

PROJECT NO.

TR036

MATERIALS SUMMARY

BRYDEN AVENUE & 5TH STREET INTERSECTION
LEWISTON, IDAHO

English

COUNTY NEZ PERCE

KEY NUMBER XXXXX

SHEET 4 OF 73

PROFESSIONAL ENGINEER LICENSED 7654 02/28/2020 STATE OF IDAHO PHILLIP A. ODEGARD

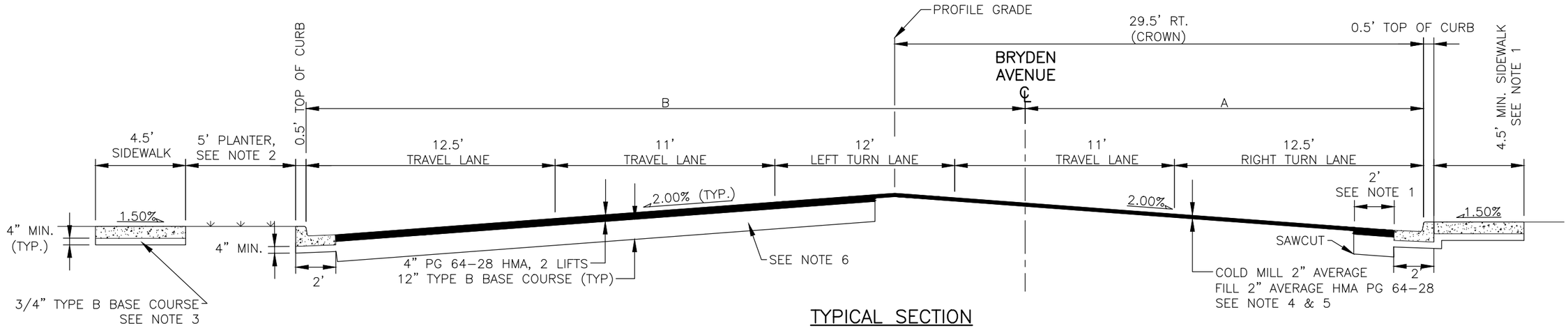

TYPICAL SECTION

NOT TO SCALE
STA. 132+00.00 – STA. 134+95.06

TYPICAL SECTION TRANSITION
STA. 134+95.06 – STA. 136+07.12

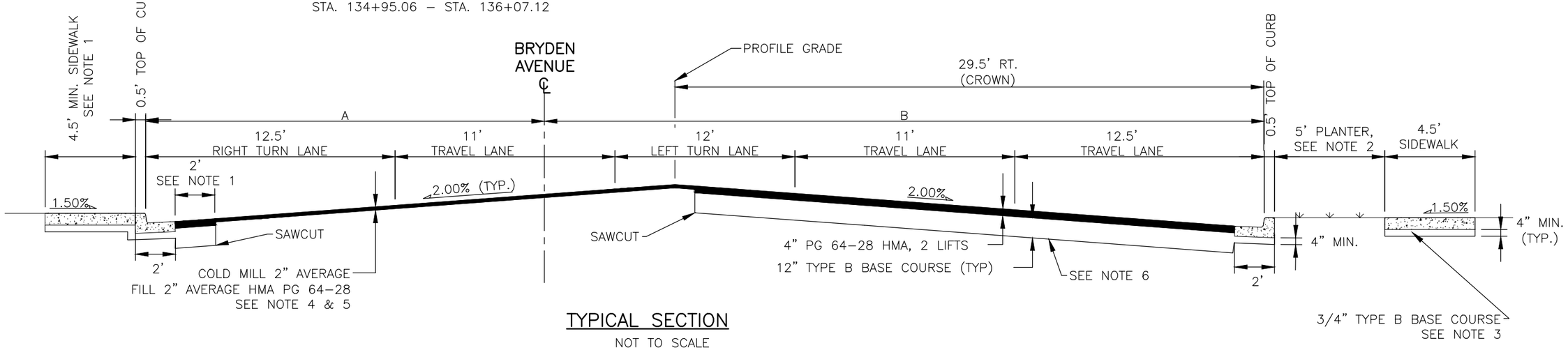

TYPICAL SECTION

NOT TO SCALE
STA. 136+07.12 – STA. 137+50.00

STATION	A	B
STA. 132+00.00 – STA. 134+95.06	19.90', RT.	49.00', LT.
STA. 136+07.12 – STA. 137+10.97	22.63', RT.	VARIES 36.37' – 35.18' LT
STA. 137+10.97 – STA. 137+50.00	22.63', RT.	

NOTES:

1. LOCATION OF PROPOSED SIDEWALK ADJACENT TO CURB & GUTTER VARIES, SEE PLANS. RETAIN EXISTING SIDEWALK ADJACENT TO EXISTING CURB & GUTTER WHERE SHOWN. PATCH BACK LOCATIONS CORRESPONDS TO PROPOSED SIDEWALK SECTIONS. MILL & FILL TO TIE INTO EXISTING CURB AND GUTTER IN ALL OTHER INSTANCES.
2. PROPOSED PLANTERS CORRESPOND TO ROADWAY WIDENING SECTIONS.
3. 3/4" TYPE B BASE COURSE SHALL BE COMPACTED TO 95% MAXIMUM DRY DENSITY IN ACCORDANCE WITH ITD STANDARD SPECIFICATION SECTION 303 – AGGREGATE BASE. SUBGRADE OR STRUCTURAL FILL SHALL BE COMPACTED TO 95% MAXIMUM DRY DENSITY PRIOR TO PLACEMENT OF BASE COURSE.
4. CROWN OF ROADWAY TO BE MODIFIED AS NECESSARY TO MEET TYPICAL SECTION.
5. MILL DEPTH TO ACHIEVE 2% NORMAL CROWN SLOPE.
6. ROADWAY WIDENING WIDTH VARIES, SEE ROAD PLANS.

REVISIONS	DESIGNED: WER	SCALES SHOWN ARE FOR 11" X 17" PRINTS ONLY	IDAHO TRANSPORTATION DEPARTMENT	PROJECT NO.	TYPICAL SECTIONS	English
DESCRIPTION	DESIGN CHECKED: GEH			TR036	BRYDEN AVENUE & 5TH STREET INTERSECTION LEWISTON, IDAHO	COUNTY NEZ PERCE
	DETAILED: WER	CADD FILE NAME L18-051_5.dwg				KEY NUMBER XXXXX
	DRAWING APPROVED: PAO	DRAWING DATE: FEBRUARY, 2020	TD&H ENGINEERING			SHEET 5 OF 73

PROFESSIONAL ENGINEER LICENSED 7654 02/28/2020 STATE OF IDAHO PHILLIP A. ODEGARD

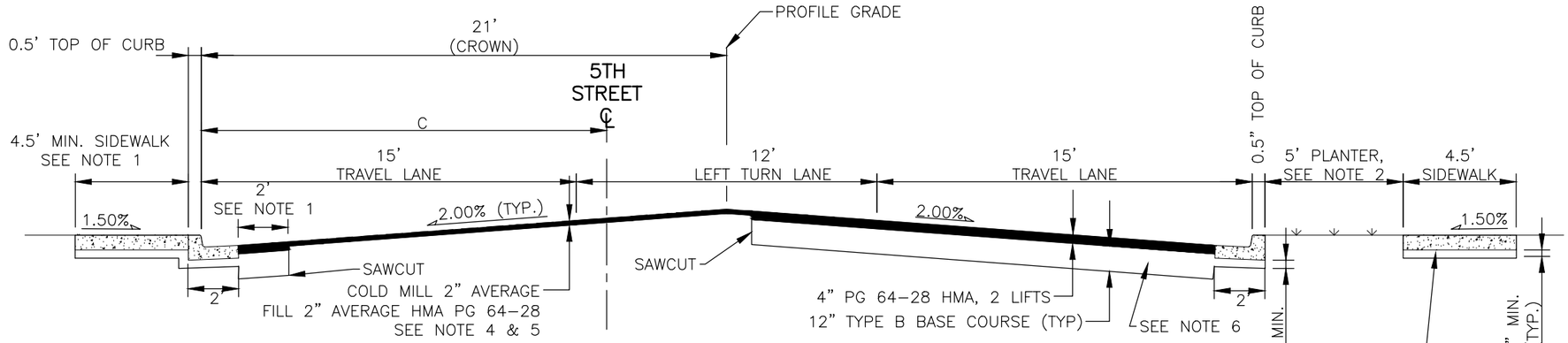

TYPICAL SECTION

NOT TO SCALE
STA. 29+65.00 – STA. 32+27.34

TYPICAL SECTION TRANSITION
STA. 32+27.34 – STA. 33+50.74

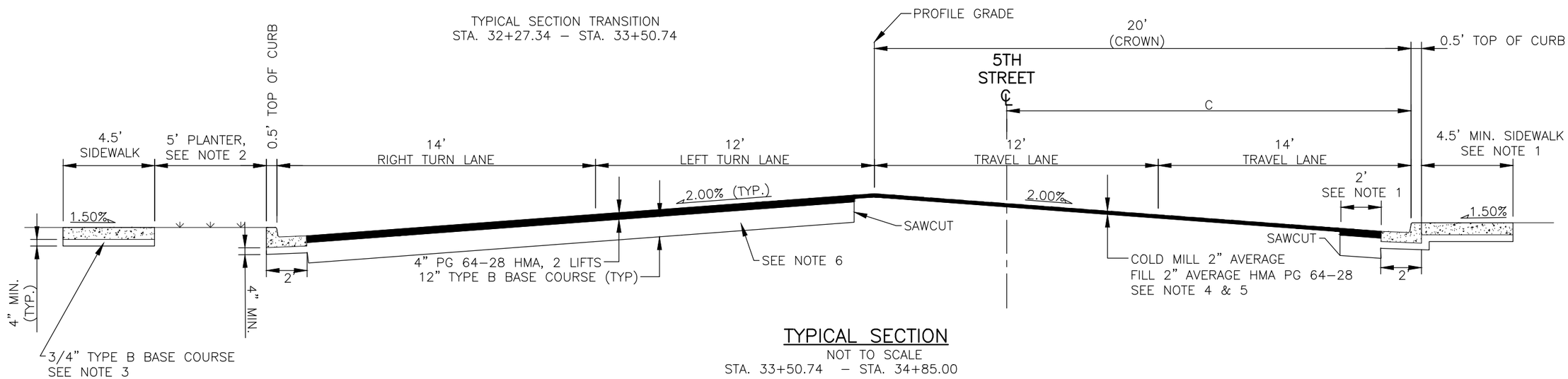

TYPICAL SECTION

NOT TO SCALE
STA. 33+50.74 – STA. 34+85.00

NOTES:

1. LOCATION OF PROPOSED SIDEWALK ADJACENT TO CURB & GUTTER VARIES, SEE PLANS. RETAIN EXISTING SIDEWALK ADJACENT TO EXISTING CURB & GUTTER WHERE SHOWN. PATCH BACK LOCATIONS CORRESPONDS TO PROPOSED SIDEWALK SECTIONS. MILL & FILL TO TIE INTO EXISTING CURB AND GUTTER IN ALL OTHER INSTANCES.
2. PROPOSED PLANTERS CORRESPOND TO ROADWAY WIDENING SECTIONS.
3. 3/4" TYPE B BASE COURSE SHALL BE COMPACTED TO 95% MAXIMUM DRY DENSITY IN ACCORDANCE WITH ITD STANDARD SPECIFICATION SECTION 303 – AGGREGATE BASE. SUBGRADE OR STRUCTURAL FILL SHALL BE COMPACTED TO 95% MAXIMUM DRY DENSITY PRIOR TO PLACEMENT OF BASE COURSE.
4. CROWN OF ROADWAY TO BE MODIFIED AS NECESSARY TO MEET TYPICAL SECTION.
5. MILL DEPTH TO ACHIEVE 2% NORMAL CROWN SLOPE.
6. ROADWAY WIDENING WIDTH VARIES, SEE ROAD PLANS.

STATION	C
STA. 29+65.00 – STA. 32+58.21	16.67', LT.
STA. 33+17.22 – STA. 34+85.00	VARIES 24.85'– 25.09', RT.

REVISIONS	
DATE	DESCRIPTION

DESIGNED: WER
DESIGN CHECKED: GEH
DETAILED: WER
DRAWING APPROVED: PAO

SCALES SHOWN ARE FOR 11" X 17" PRINTS ONLY
CADD FILE NAME L18-051_6.dwg
DRAWING DATE: FEBRUARY, 2020

IDAHO TRANSPORTATION DEPARTMENT
TD&H ENGINEERING

PROJECT NO. TR036

TYPICAL SECTIONS
BRYDEN AVENUE & 5TH STREET INTERSECTION
LEWISTON, IDAHO

English
COUNTY NEZ PERCE
KEY NUMBER XXXXX
SHEET 6 OF 73

PROFESSIONAL ENGINEER
LICENSED
7654
02/28/2020
STATE OF IDAHO
PHILLIP A. ODEGARD

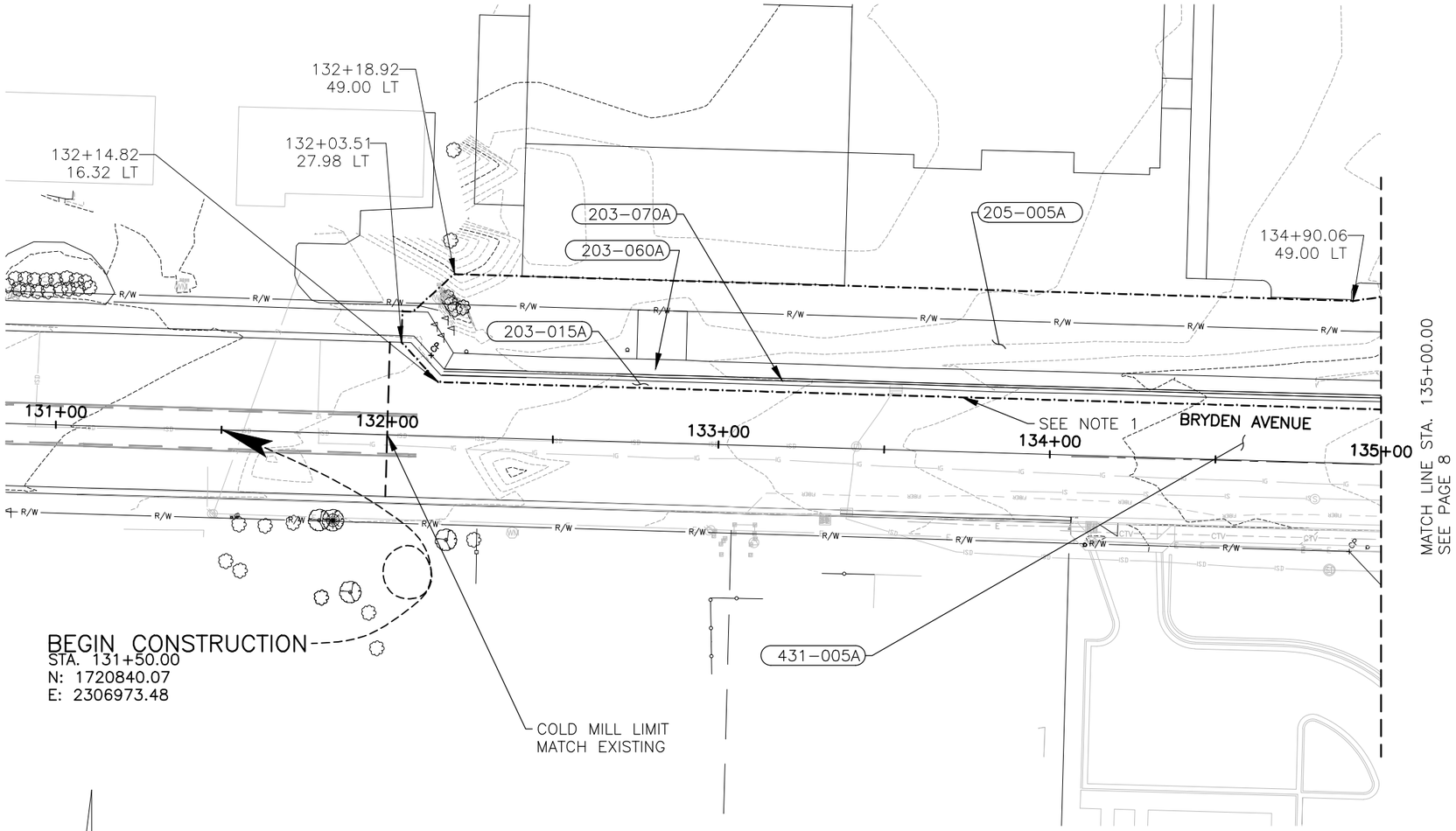

20 10 0 20 40
FEET

203-015A REM. OF BIT. SURF
75 S.Y.
STA. 132+03.51 LT-135+00.00 LT

203-060A REM. CONC. SIDEWALK
185 S.Y.
STA. 132+03.51 LT-135+00.00 LT

203-070A REM. OF CURB & GUTTER
315 L.F.
STA.132+03.51 LT-135+00.00 LT

205-005A EXCAVATION
430 C.Y.
STA. 132+03.51 LT-135+00.00 LT

431-005A COLD MILLING
1295 S.Y.
STA. 132+00.00 LT-135+00.00 LT

NOTE:
1. SAW-CUT EXISTING PAVEMENT 2' FROM EXISTING CURB BEFORE DEMO.

PROFESSIONAL ENGINEER LICENSED 7654 02/28/2020 STATE OF IDAHO PHILLIP A. ODEGARD

REVISIONS						
DATE	DESCRIPTION	DESIGNED: WER	SCALES SHOWN ARE FOR 11" X 17" PRINTS ONLY	IDAHO TRANSPORTATION DEPARTMENT	PROJECT NO.	BRYDEN AVENUE W. - DEMO PLAN
		DESIGN CHECKED: GEH			TR036	BRYDEN AVENUE & 5TH STREET INTERSECTION LEWISTON, IDAHO
		DETAILED: WER	CADD FILE NAME L18-051_7.dwg			
		DRAWING APPROVED: PAO	DRAWING DATE: FEBRUARY, 2020	TD&H ENGINEERING		

English
COUNTY NEZ PERCE
KEY NUMBER XXXXX
SHEET 7 OF 73

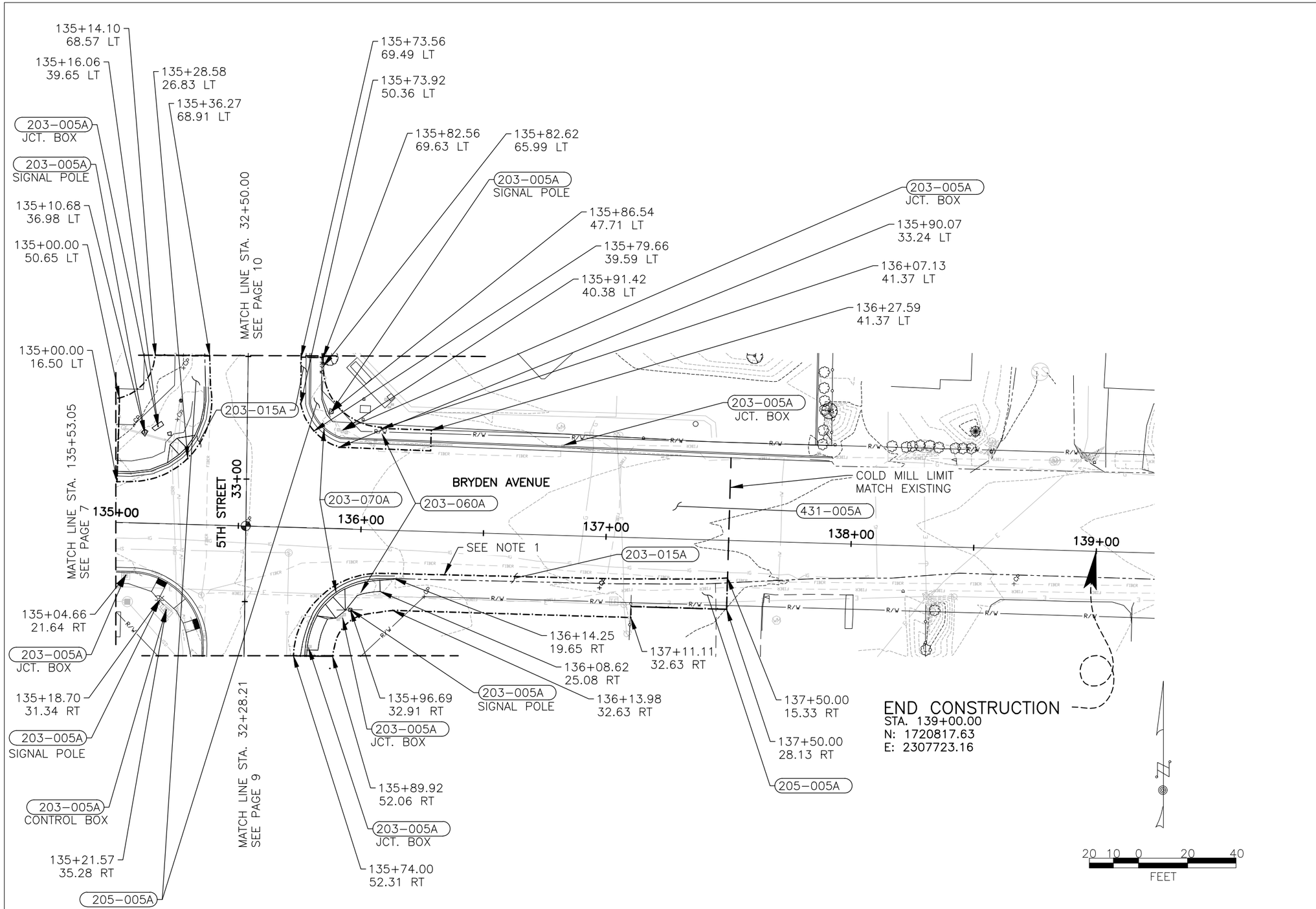

203–005A REM. OF OBSTRUCTIONS
1 L.S.
SIGNAL POLE STA.135+10.68 LT
SIGNAL POLE STA.135+18.70 RT
SIGNAL POLE STA.135+86.54 LT
SIGNAL POLE STA.135+96.69 RT
JCT BOX STA.135+04.66 RT
JCT BOX STA.135+16.06 LT
JCT BOX STA.135+80.39 RT
JCT BOX STA.135+93.73 RT
JCT BOX STA.135+97.42 LT
JCT BOX STA.136+81.49 LT
CONTROL BOX STA.135+21.57 RT

203–015A REM. OF BIT. SURF
75 S.Y.
STA. 135+00.00 LT–136+27.59 LT
STA. 135+74.00 RT–136+08.62 RT

203–060A REM. CONC. SIDEWALK
100 S.Y.
STA. 135+00.00 LT–136+27.59 LT
STA. 135+74.00 RT–136+08.62 RT

203–070A REM. OF CURB & GUTTER
200 L.F.
STA. 135+00.00 LT–137+50.00 LT
STA. 135+74.00 RT–136+08.62 RT

205–005A EXCAVATION
195 C.Y.
STA. 135+00.00 LT–136+27.59 LT
STA. 135+74.00 RT–136+08.62 RT

431–005A COLD MILLING
1895 S.Y.
STA. 135+00.00–137+50.00 LT

NOTES:

1. SAW–CUT EXISTING PAVEMENT 2' FROM EXISTING CURB BEFORE DEMO.

REVISIONS	
DATE	DESCRIPTION

DESIGNED: WER
DESIGN CHECKED: GEH
DETAILED: WER
DRAWING APPROVED: PAO

SCALES SHOWN ARE FOR 11" X 17" PRINTS ONLY
CADD FILE NAME L18–051_8.dwg
DRAWING DATE: FEBRUARY, 2020

IDAHO TRANSPORTATION DEPARTMENT
TD&H ENGINEERING

PROJECT NO.
TR036

BRYDEN AVENUE E. – DEMO PLAN
BRYDEN AVENUE & 5TH STREET INTERSECTION
LEWISTON, IDAHO

English
COUNTY NEZ PERCE
KEY NUMBER XXXXX
SHEET 8 OF 73

PROFESSIONAL ENGINEER
LICENSED
7654
02/28/2020
STATE OF IDAHO
PHILLIP A. ODEGARD

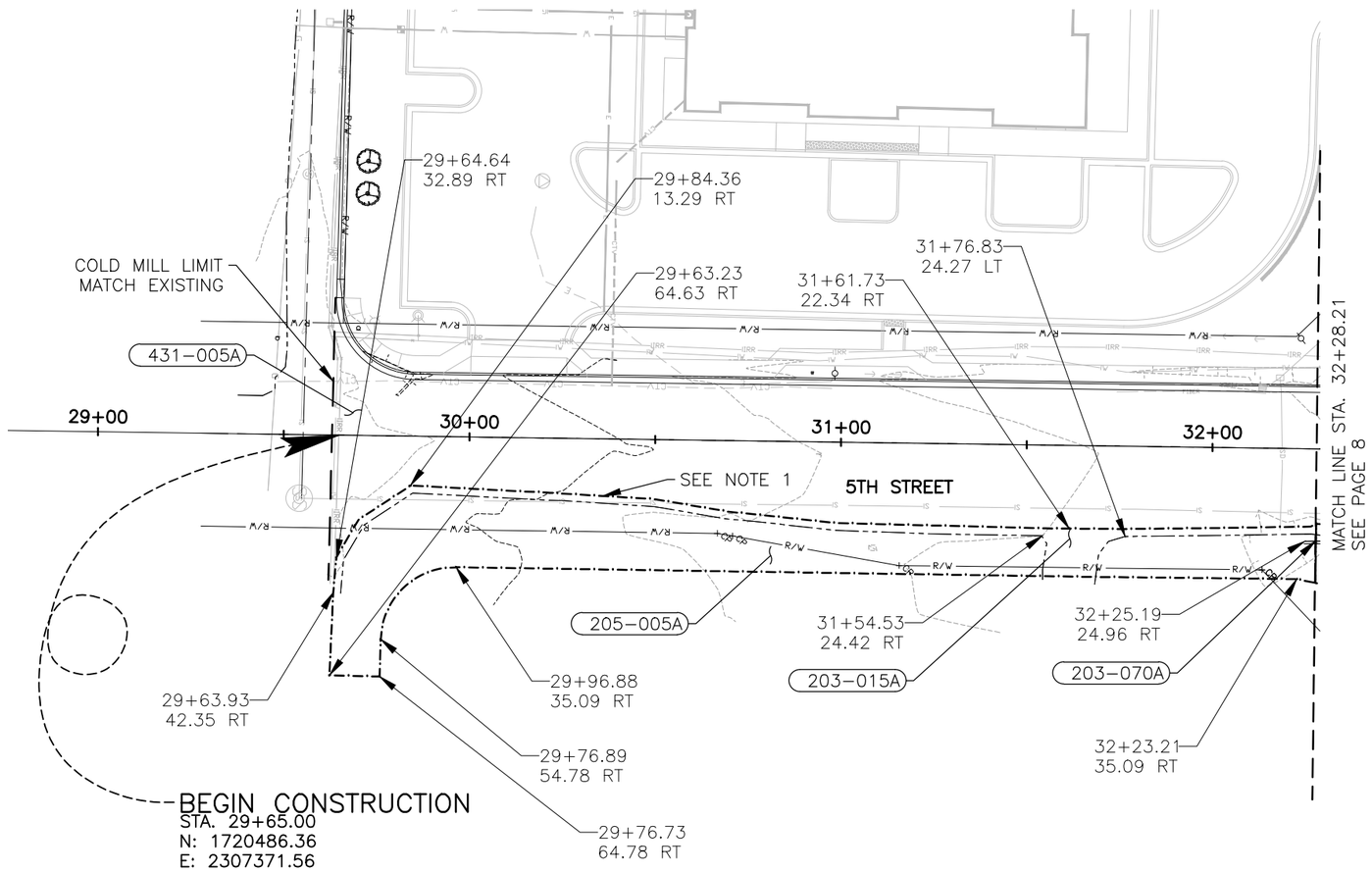

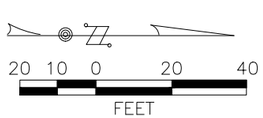

203-015A REM. OF BIT. SURF
90 S.Y.
STA. 29+65.00 RT–32+28.21 RT

203-070A REM. OF CURB & GUTTER
5 L.F.
STA. 32+25.19 RT–32+28.21 RT

205-005A EXCAVATION
155 C.Y.
STA. 29+65.00 RT–32+28.21 RT

431-005A COLD MILLING
1130 S.Y.
STA. 29+65.00 LT–32+28.21 LT

NOTES:

1. SAW-CUT EXISTING PAVEMENT 2' FROM EXISTING EDGE OF PAVEMENT BEFORE DEMO.

PROFESSIONAL ENGINEER LICENSED 7654 02/28/2020 STATE OF IDAHO PHILLIP A. ODEGARD

REVISIONS						
DATE	DESCRIPTION	DESIGNED: WER	SCALES SHOWN ARE FOR 11" X 17" PRINTS ONLY	IDAHO TRANSPORTATION DEPARTMENT	PROJECT NO.	5TH STREET S. – DEMO PLAN
		DESIGN CHECKED: GEH			TR036	BRYDEN AVENUE & 5TH STREET INTERSECTION LEWISTON, IDAHO
		DETAILED: WER	CADD FILE NAME L18-051_9.dwg	TD&H ENGINEERING		
		DRAWING APPROVED: PAO	DRAWING DATE: FEBRUARY, 2020			

English
COUNTY NEZ PERCE
KEY NUMBER XXXXX
SHEET 9 OF 73

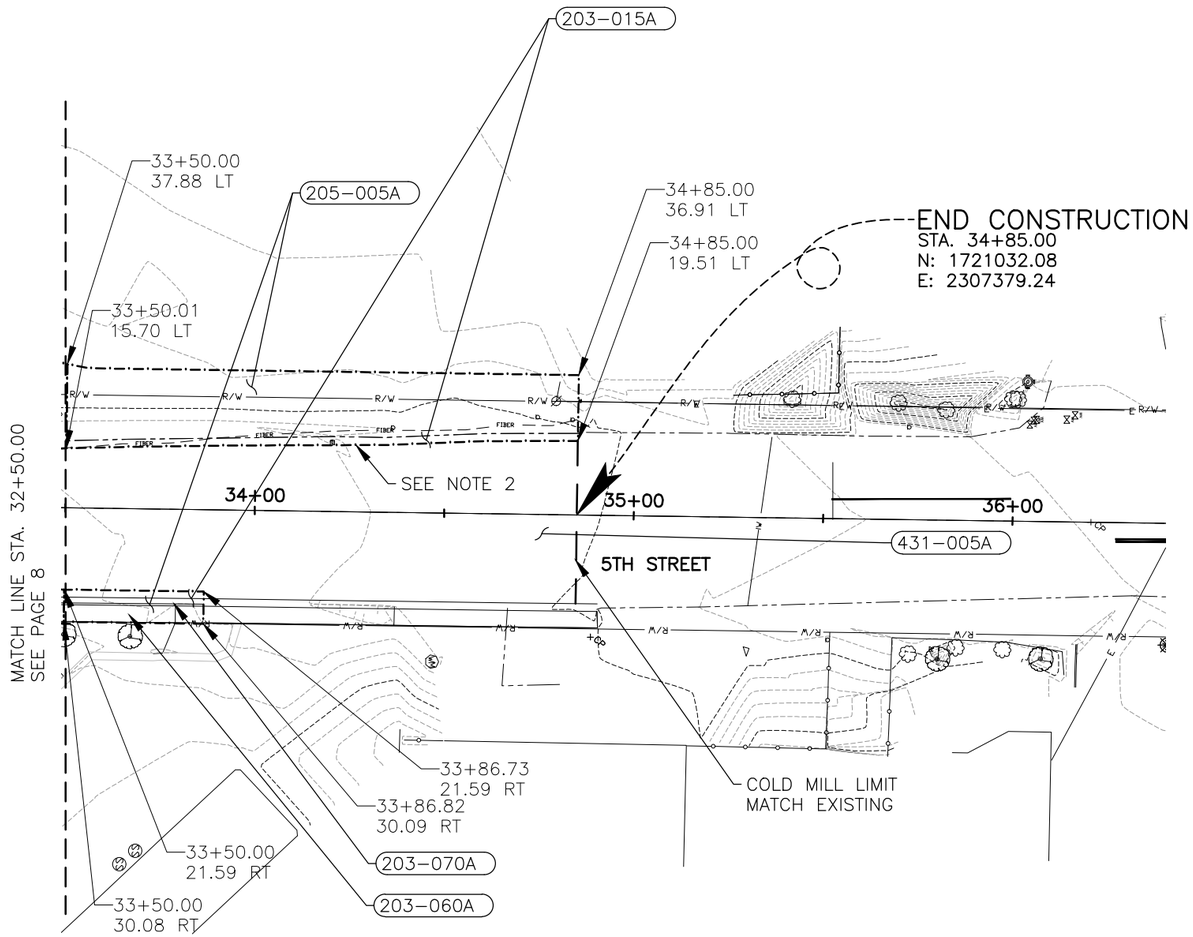

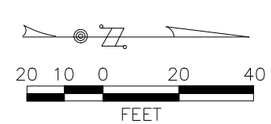

203-015A REM. OF BIT. SURF

40 S.Y.
STA. 33+50.00 RT–33+86.73 RT
STA. 33+50.00 LT–34+85.00 LT

203-060A REM. CONC. SIDEWALK

20 S.Y.
STA. 33+50.00 RT–34+85.00 LT

203-070A REM. OF CURB & GUTTER

40 L.F.
STA. 33+50.00 RT–34+85.00 RT

205-005A EXCAVATION

110 C.Y.
STA. 33+50.00 RT–33+86.73 RT
STA. 33+50.00 LT–34+85.00 LT

431-005A COLD MILLING

670 S.Y.
STA. 33+50.00 LT–34+85.00 LT

NOTES:

1. SAW–CUT EXISTING PAVEMENT 2' FROM EXISTING EDGE OF PAVEMENT BEFORE DEMO.

REVISIONS	
DATE	DESCRIPTION

DESIGNED: WER
DESIGN CHECKED: GEH
DETAILED: WER
DRAWING APPROVED: PAO

SCALES SHOWN ARE FOR 11" X 17" PRINTS ONLY

CADD FILE NAME L18–051_10.dwg

DRAWING DATE: FEBRUARY, 2020

IDAHO TRANSPORTATION DEPARTMENT

TD&H ENGINEERING

PROJECT NO. TR036

5TH STREET N. – DEMO PLAN

BRYDEN AVENUE & 5TH STREET INTERSECTION
LEWISTON, IDAHO

English

COUNTY NEZ PERCE

KEY NUMBER XXXXX

SHEET 10 OF 73

PROFESSIONAL ENGINEER LICENSED 7654 02/28/2020 STATE OF IDAHO PHILLIP A. ODEGARD

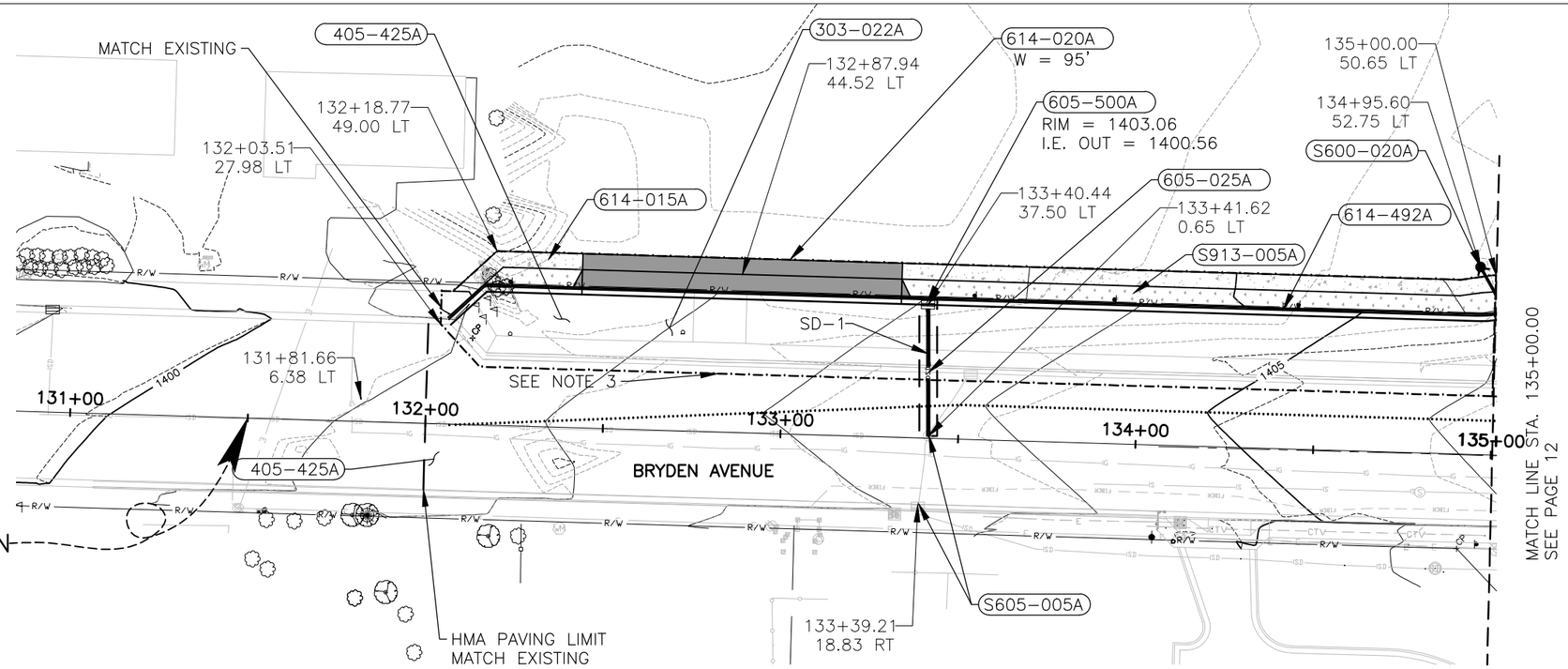

BEGIN CONSTRUCTION
STA. 131+50.00
N: 1720840.07
E: 2306973.48

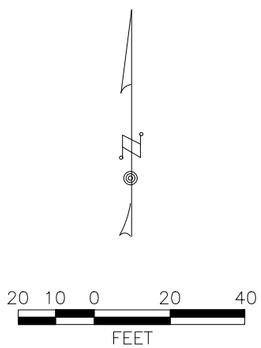

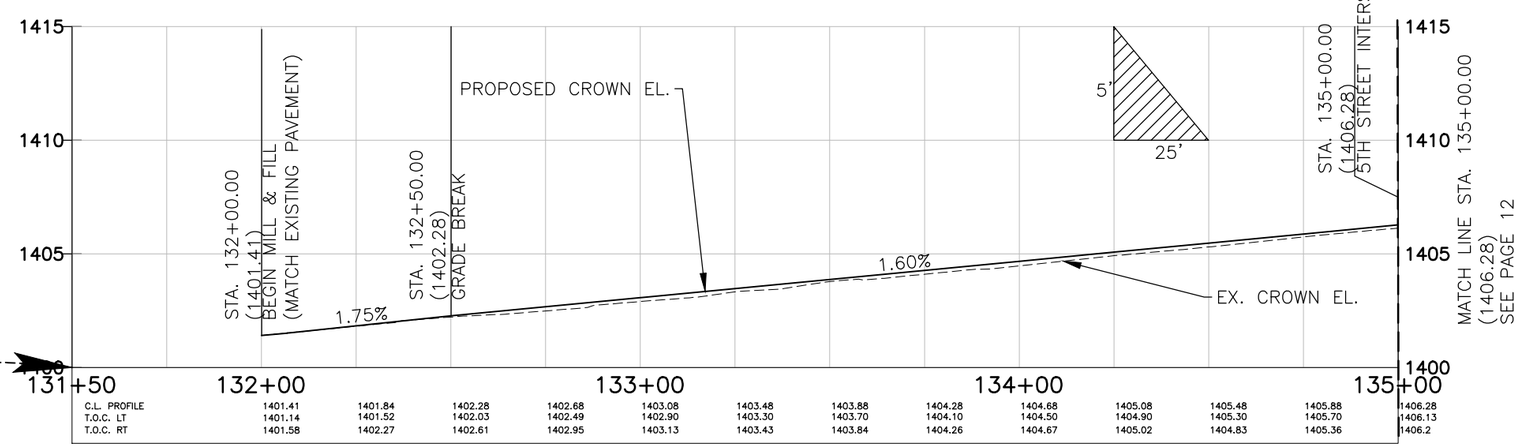

BEGIN CONSTRUCTION
STA. 131+50.00
N: 1720840.07
E: 2306973.48

(303-022A) 3/4" TYPE "B" BASE
610 TONS
STA. 132+00.00 LT–135+00.00 LT

(405-425A) SUPERPAVE HMA
315 TONS
STA. 132+03.51 LT–135+00.00 LT
TYPICAL SECTION 1

(605-025A) STORM SEWER PIPE
36 L.F.
STA. 133+40.44 LT–133+41.62 LT

(605-500A) CATCH BASIN TYPE 1
1 EA.
STA. 133+40.44 LT

(614-015A) CONCRETE SIDEWALK
105 S.Y.
STA. 132+03.51 LT–135+00.00 LT

(614-020A) DRIVEWAY
100 S.Y.
STA. 132+87.94 LT

(615-492A) CURB & GUTTER(TY. 2)
300 L.F.
STA. 132+03.51 LT–135+00.00 LT

(S605-005A) ADJUST STRUCTURE
2 EA.
STA. 133+41.62 &
STA. 133+39.21

(S600-020A) FIRE HYDRANT ASSEMBLY
1 EA.
STA. 134+95.60 LT

(S913-005A) LANDSCAPE–RIVER ROCK
20 C.Y.
STA. 132+03.51 LT–135+00.00 LT

NOTES:

1. CROWN OFFSET VARIES 0.35'R.T. AT STA 132+06.78 TO 9.5'L.T. AT 133+00.00, CROWN OFFSET EQUALS 9.5' L.T. AT STA. 133+00.00 TO 135+00.00.
2. ADJUST EX. UTILITIES TO PROP. FINISHED GROUND.
3. ASPHALT/MILL & FILL SAWCUT BOUNDARY.

REVISIONS					
DATE	DESCRIPTION	DESIGNED: WER	SCALES SHOWN ARE FOR 11" X 17" PRINTS ONLY	IDAHO TRANSPORTATION DEPARTMENT	PROJECT NO. TR036
		DESIGN CHECKED: GEH			BRYEDEN AVENUE W. – ROAD PLAN
		DETAILED: WER	CADD FILE NAME L18-051_11.dwg		BRYDEN AVENUE & 5TH STREET INTERSECTION LEWISTON, IDAHO
		DRAWING APPROVED: PAO	DRAWING DATE: FEBRUARY, 2020	TD&H ENGINEERING	

English
COUNTY NEZ PERCE
KEY NUMBER XXXXX
SHEET 11 OF 73

PROFESSIONAL ENGINEER LICENSED 7654 02/28/2020 STATE OF IDAHO PHILLIP A. ODEGARD

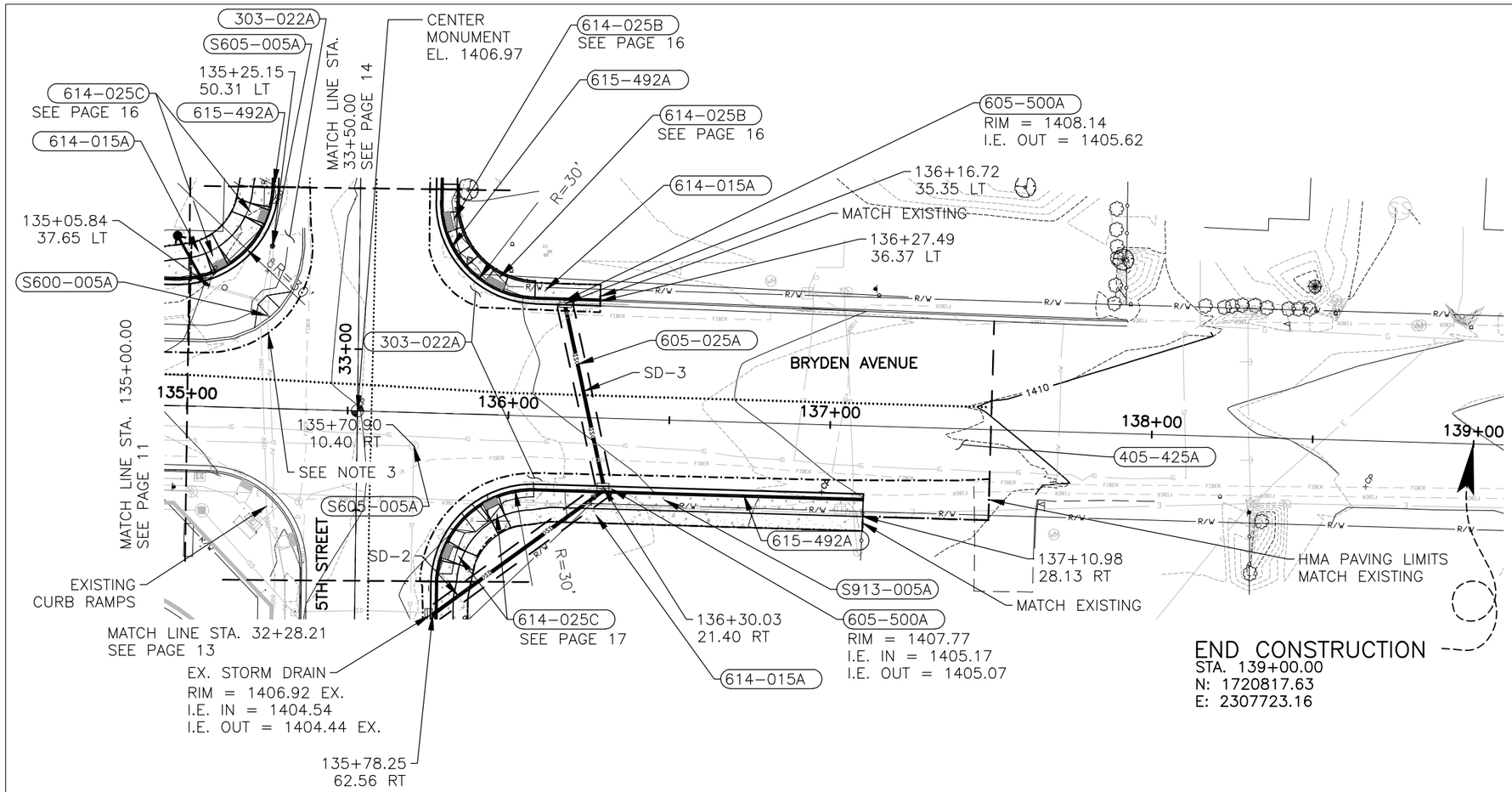

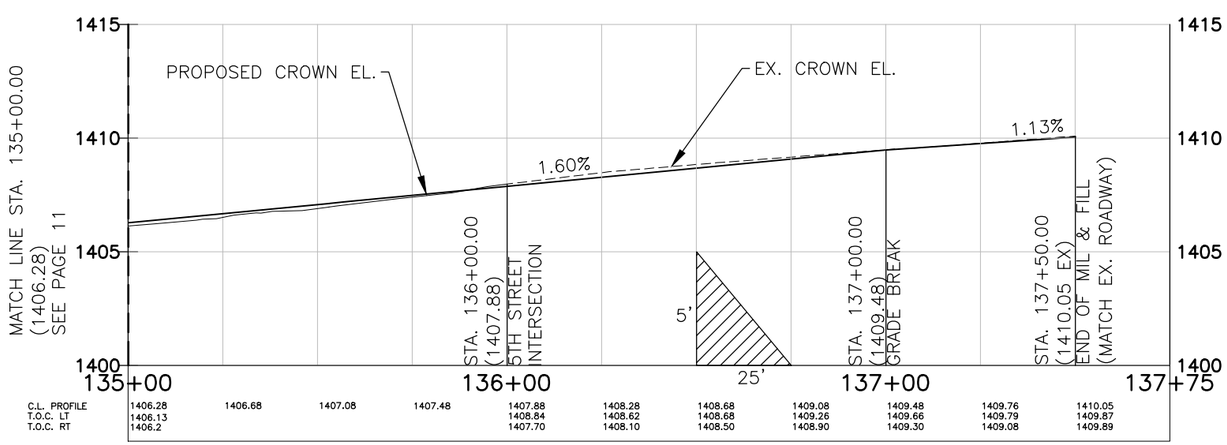

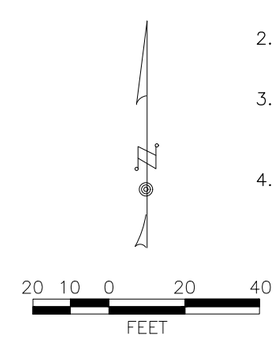

NOTES:

1. CROWN OFFSET EQUALS 6.87' L.T. AT STA. 136+00.00 TO 137+50.00. ADJUST EX. UTILITIES TO PROP. FINISHED GROUND.
2. ASPHALT/MILL & FILL SAWCUT BOUNDARY.
3. CURB RETURN ELEVATIONS DESIGNATED IN RAMP DETAIL SHEETS.
4. REFERENCE CITY OF LEWISTON STANDARD DRAWING 4-12 FOR FIRE HYDRANT INSTALLATION.

303-022A 3/4" TYPE "B" BASE
265 TONS
STA. 135+00.00 LT-136+27.49 LT
STA. 135+76.25 RT-137+50.00 RT

405-425A SUPERPAVE HMA
280 TONS
STA. 135+00.00 LT-137+50.00 LT

605-025A STORM SEWER PIPE
122 L.F.
STA. 135+78.25 RT-136+16.72 LT

605-500A CATCH BASIN TYPE 1
2 EA.
STA. 136+16.72 LT &
STA. 136+30.03 RT

614-015A CONCRETE SIDEWALK
105 S.Y.
STA. 135+00.00 LT-136+27.49 LT
STA. 135+84.98 RT-137+10.98 RT

614-025B CURB RAMP (TY. 2)
25 S.Y.
STA. 135+77.07 LT-136+07.12 LT

614-025C CURB RAMP (TY. 3)
25 S.Y.
STA. 135+78.98 RT-136+30.03 RT
STA. 135+00.00 LT-135+25.06 LT

615-492A CURB & GUTTER (TY. 2)
260 L.F.
STA. 135+00.00 LT-136+27.49 LT
STA. 135+78.26 RT-137+10.98 RT

S600-005A ADJUST VALVE COVER
4 EA.
STA. 135+18.18 LT-135+24.91 LT

S605-005A ADJUST STRUCTURE
2 EA.
STA. 135+70.90 RT

S913-005A LANDSCAPE-RIVER ROCK
15 C.Y.
STA. 135+00.00 LT-137+50.00 LT

REVISIONS	DESIGNED: WER	SCALES SHOWN ARE FOR 11" X 17" PRINTS ONLY	IDAHO TRANSPORTATION DEPARTMENT	PROJECT NO.	BRYDEN AVENUE E. - ROAD PLAN	English
DESCRIPTION	DESIGN CHECKED: GEH			TR036	BRYDEN AVENUE & 5TH STREET INTERSECTION LEWISTON, IDAHO	COUNTY NEZ PERCE
	DETAILED: WER	CADD FILE NAME L18-051_12.dwg	TD&H ENGINEERING			KEY NUMBER XXXXX
	DRAWING APPROVED: PAO	DRAWING DATE: FEBRUARY, 2020				SHEET 12 OF 73

PROFESSIONAL ENGINEER LICENSED 7654 02/28/2020 STATE OF IDAHO PHILLIP A. ODEGARD

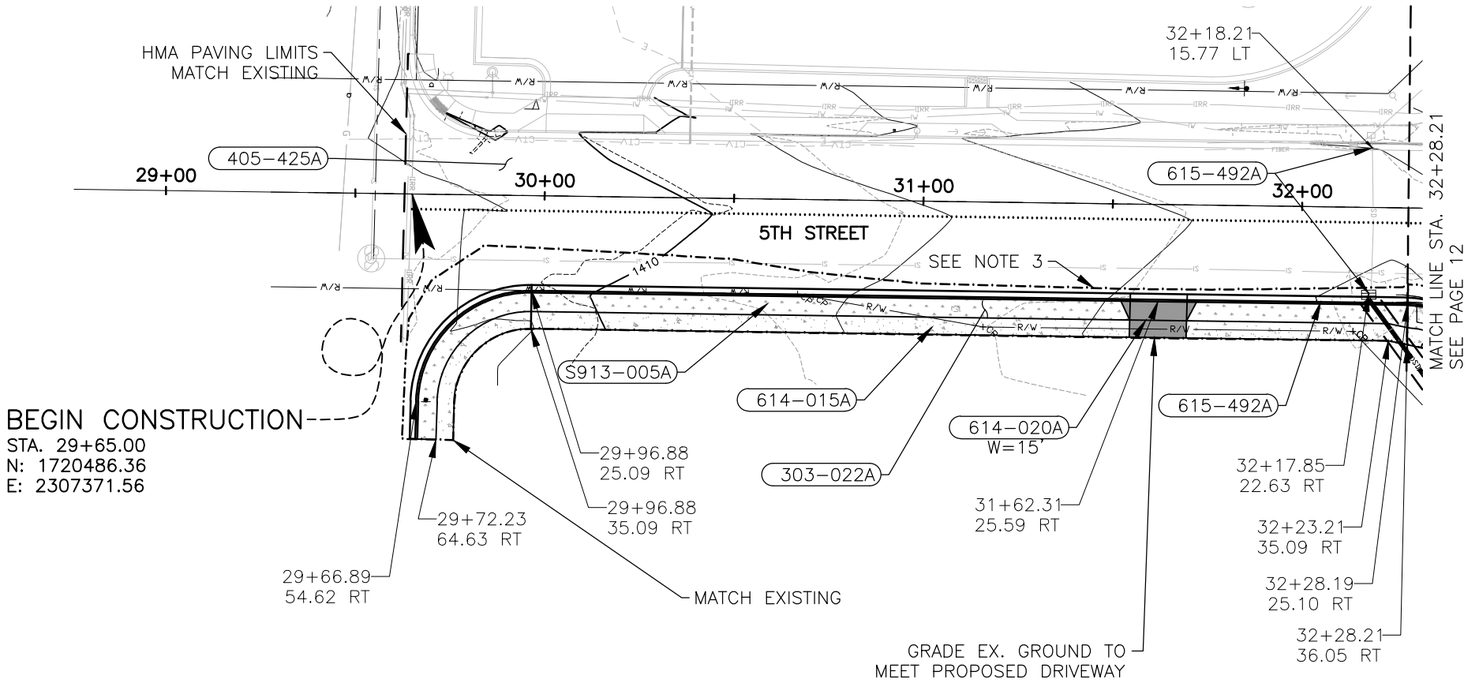

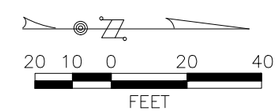

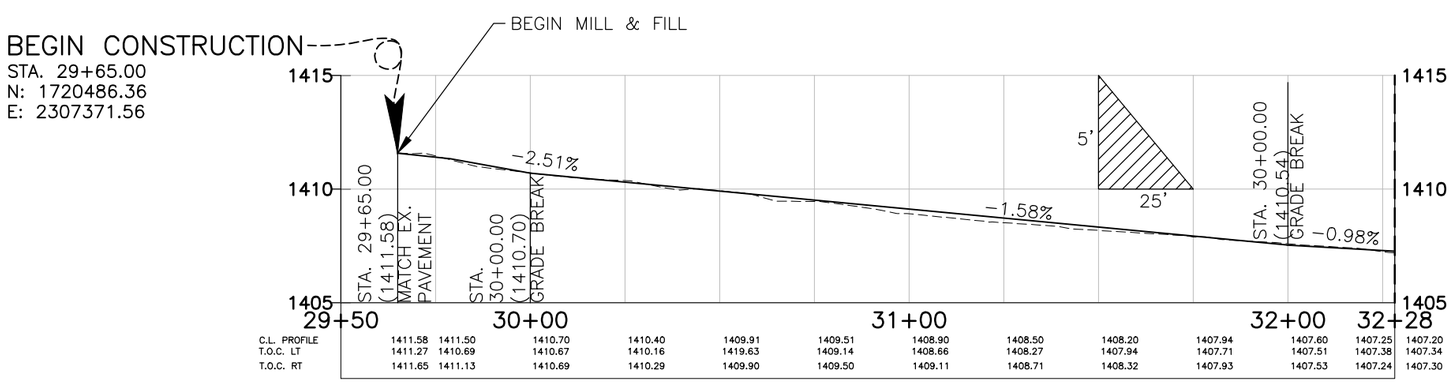

(303-022A) 3/4" TYPE "B" BASE
175 TONS
STA. 29+65.00 RT-32+28.21 RT

(405-425A) SUPERPAVE HMA
165 TONS
STA. 29+65.00 RT-32+28.21 RT

(614-015A) CONCRETE SIDEWALK
140 S.Y.
STA. 29+65.00 RT-32+28.21 RT

(614-020A) CONCRETE DRIVEWAY
20 S.Y.
STA. 31+54.81 RT-31+69.81 RT

(615-492A) CURB & GUTTER (TY. 2)
290 L.F.
STA. 29+65.00 RT-32+28.21 RT

(S605-010) ADJUST STRUCTURE
2 EA.
STA. 32+17.85 RT &
STA. 32+18.21 RT

(S913-005A) LANDSCAPE-RIVER ROCK
30 C.Y.
STA. 29+65.00 RT-32+28.21 RT

NOTES:

1. CROWN OFFSET EQUALS 4.09' R.T. AT STA. 29+65.00 TO 32+28.21.
2. ADJUST EX. UTILITIES TO PROP. FINISHED GROUND.
3. ASPHALT/MILL & FILL SAWCUT BOUNDARY.

REVISIONS	DESIGNED: WER	SCALES SHOWN ARE FOR 11" X 17" PRINTS ONLY	IDAHO TRANSPORTATION DEPARTMENT	PROJECT NO.	5TH STREET S. - ROAD PLAN	English
DESCRIPTION	DESIGN CHECKED: GEH			TR036	BRYDEN AVENUE & 5TH STREET INTERSECTION LEWISTON, IDAHO	COUNTY NEZ PERCE
	DETAILED: WER	CADD FILE NAME L18-051_13.dwg				KEY NUMBER XXXXX
	DRAWING APPROVED: PAO	DRAWING DATE: FEBRUARY, 2020	TD&H ENGINEERING			SHEET 13 OF 73

PROFESSIONAL ENGINEER LICENSED 7654 02/28/2020 STATE OF IDAHO PHILLIP A. ODEGARD

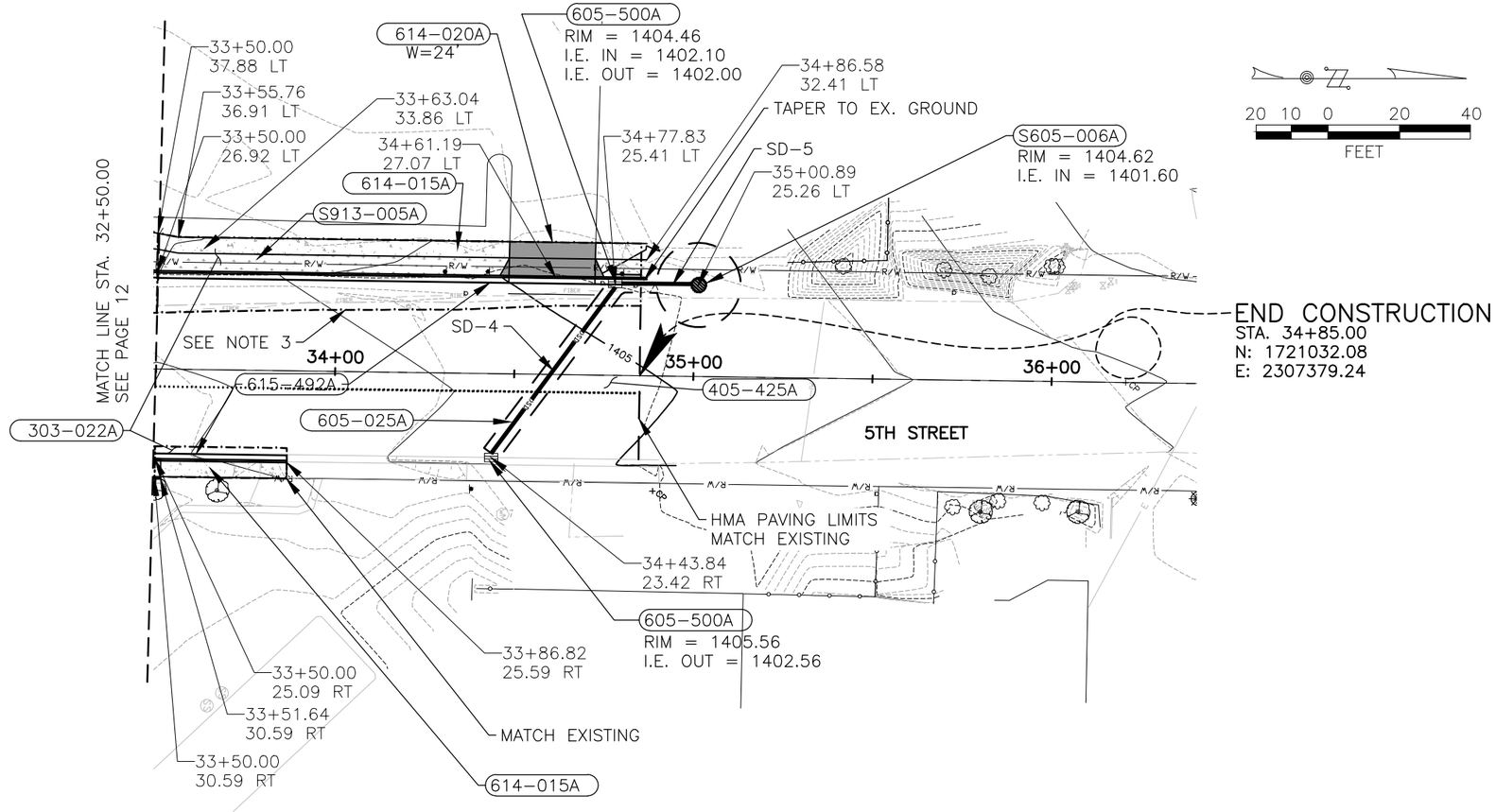

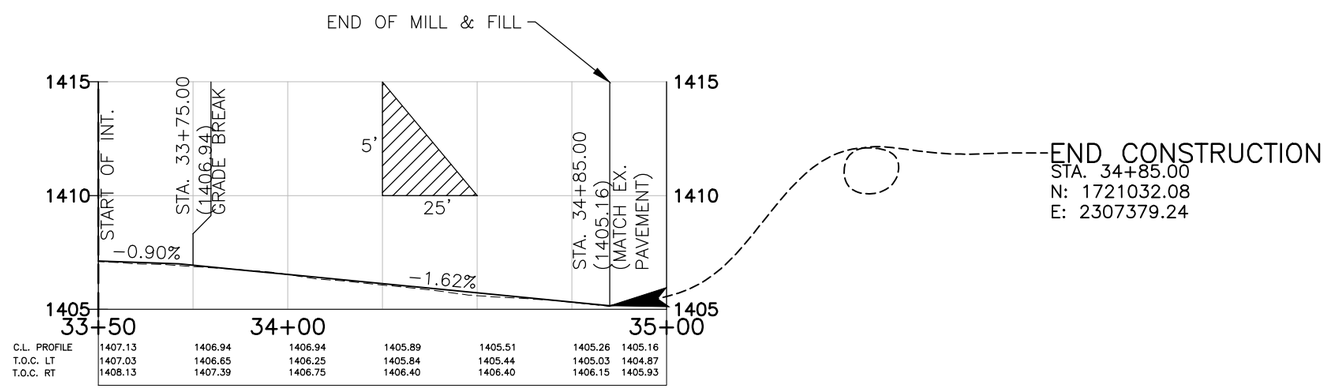

	33+50	34+00				35+00	
C.L. PROFILE	1407.13	1406.94	1406.94	1405.89	1405.51	1405.26	1405.16
T.O.C. LT	1407.03	1406.65	1406.25	1405.84	1405.44	1405.03	1404.87
T.O.C. RT	1408.13	1407.39	1406.75	1406.40	1406.40	1406.15	1405.93

303-022A 3/4" TYPE "B" BASE
135 TONS
STA. 33+50.00 LT-34+85.00 LT
STA. 33+50.00 RT-33+86.82 RT

405-425A SUPERPAVE HMA
115 TONS
STA. 33+50.00 LT-34+85.00 RT

605-025A STORM SEWER PIPE
78 L.F.
STA. 34+43.84 RT-35+00.89 LT

605-500A CATCH BASIN TYPE 1
2 EA.
STA. 34+43.84 RT &
34+77.83 LT

614-015A CONCRETE SIDEWALK
80 S.Y.
STA. 33+50.00 RT-33+89.82 RT
STA. 33+50.00 LT-34+85.00 LT

614-020A CONCRETE DRIVEWAY
30 S.Y.
STA. 34+49.19 LT-34+73.19 LT

615-492A CURB & GUTTER(TY. 2)
180 L.F.
STA. 33+50.00 RT-33+89.82 RT
STA. 33+50.00 LT-34+85.00 LT

S605-006A DRYWELL
1 EA.
STA. 35+00.89 LT

S913-005A LANDSCAPE-RIVER ROCK
10 C.Y.
STA. 33+50.00 LT-34+85.00 LT

NOTES:

1. CROWN OFFSET EQUALS 5.00' R.T. AT STA. 33+50.00 TO 34+85.00.
2. ADJUST EX. UTILITIES TO PROP. FINISHED GROUND.
3. ASPHALT/MILL & FILL SAWCUT BOUNDARY.

PROFESSIONAL ENGINEER
LICENSED
7654
02/28/2020
STATE OF IDAHO
PHILLIP A. ODEGARD

REVISIONS	DESIGNED: WER	SCALES SHOWN ARE FOR 11" X 17" PRINTS ONLY	IDAHO TRANSPORTATION DEPARTMENT	PROJECT NO.	5TH STREET N. - ROAD PLAN	English
DESCRIPTION	DESIGN CHECKED: GEH			TR036	BRYDEN AVENUE & 5TH STREET INTERSECTION LEWISTON, IDAHO	COUNTY NEZ PERCE
	DETAILED: WER	CADD FILE NAME L18-051_14.dwg	TD&H ENGINEERING			KEY NUMBER XXXXX
	DRAWING APPROVED: PAO	DRAWING DATE: FEBRUARY, 2020				SHEET 14 OF 73

STATION (X) ALIGNMENT B = BRYDEN AVENUE F = 5TH STREET		PIPE CULVERT (LENGTH IN FEET) PIPE SIZE (INCHES) 12"	18"	24"	PLASTIC PIPE: RIBBED POLYETHYLENE (PE) X	CORRUGATED POLYETHYLENE (PE) X	RIBBED POLYVINYL CHLORIDE (PVC) X	METAL PIPE – STEEL PIPE: GALVANIZED STEEL X	ALUMINIZED STEEL X	___" CORRUGATION ___ DEPTH GAGE	___" CORRUGATION ___ LENGTH GAGE	COATED X	ANNULAR CORR. X	HELICAL CORR. X	ALUMINUM PIPE: ___" CORRUGATION ___ DEPTH THICK. (")	___" CORRUGATION ___ LENGTH THICK. (")	COATED X	ANNULAR CORR. X	HELICAL CORR. X	CONCRETE PIPE: REINFORCED CLASS II–V	IRRIGATION OR DRAINAGE X	TYPE OF BEDDING 1,2,3	RUBBER GASKET JOINTS REQUIRED X	FILL HEIGHT FT.	STR. EXC. C.Y.	COMP. BKFILL C.Y.	MINOR STRUCTURES: DRAWING NUMBER	STRUCTURE EA.	CONCRETE C.Y.	METAL REINF. LBS.	TIMBER MFBM	GRATES EA.	DRYWELL TYPE 1A EA.		CATCH BASINS TYPE 1A EA.	CATCH BASINS TYPE 1 EA.	REMARKS (INDICATE ELONGATION) (WHEN REQUIRED)
133+40.44– 133+41.62 (B)	SD–1	36			X	X																																1	
136+07.12– 136+30.03 (B)	SD–2	56			X	X																																2	
136+30.03– 135+78.25 (B)	SD–3	66			X	X																																1	
34+43.84– 34+77.83 (F)	SD–4	58			X	X																																2	
34+77.83– 35+00.89 (F)	SD–5	20			X	X																													1			1	
SHEET TOTAL																																							
PROJ. TOTAL		236																																	1			5	

NOTES:
1. STR. EXC. AND COMP. BACKFILL IS INCIDENTAL TO THE PIPE.
2. USE OF WATER CLASS PIPE WHERE SEPARATION IS NEEDED IS INCIDENTAL TO THE PIPE.

PROFESSIONAL ENGINEER LICENSED 7654 02/28/2020 STATE OF IDAHO PHILLIP A. ODEGARD

REVISIONS	
DATE	DESCRIPTION

DESIGNED: WER
DESIGN CHECKED: GEH
DETAILED: WER
DRAWING APPROVED: PAO

SCALES SHOWN ARE FOR 11" X 17" PRINTS ONLY
CADD FILE NAME L18–051_15.dwg
DRAWING DATE: FEBRUARY, 2020

IDAHO TRANSPORTATION DEPARTMENT
TD&H ENGINEERING

PROJECT NO. TR036

STORM SEWER SUMMARY
BRYDEN AVENUE & 5TH STREET INTERSECTION LEWISTON, IDAHO

English
COUNTY NEZ PERCE
KEY NUMBER XXXXX
SHEET 15 OF 73

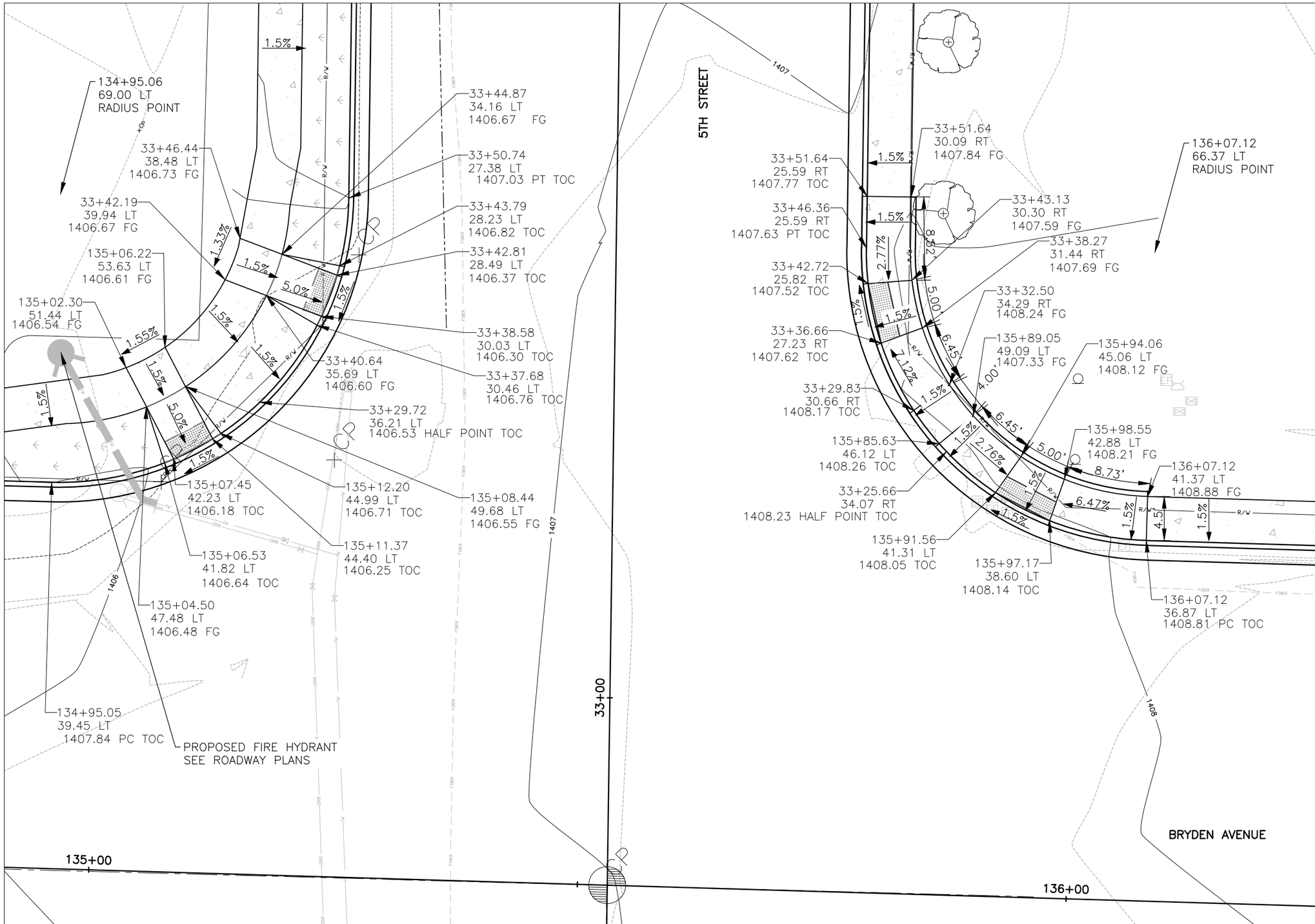

NOTES:

1. FACE OF CURB RADIUS = 30' FOR ALL QUADRANTS
2. RETAIN AND PROTECT ALL MONUMENTS INCLUDING RIGHT-OF-WAY CONTROL POINTS

5 2.5 0 5 10
FEET

REVISIONS	
DATE	DESCRIPTION

DESIGNED: WER	SCALES SHOWN ARE FOR 11" X 17" PRINTS ONLY	
DESIGN CHECKED: GEH		
DETAILED: WER	CADD FILE NAME L18-051_16.dwg	
DRAWING APPROVED: PAO	DRAWING DATE: FEBRUARY, 2020	

IDAHO TRANSPORTATION DEPARTMENT

TD&H ENGINEERING

PROJECT NO.
TR036

NORTH CURB RAMP DETAILS

BRYDEN AVENUE & 5TH STREET INTERSECTION
LEWISTON, IDAHO

English

COUNTY NEZ PERCE

KEY NUMBER XXXXX

SHEET 16 OF 73

PROFESSIONAL ENGINEER
LICENSED
7654
02/28/2020
STATE OF IDAHO
PHILLIP A. ODEGARD

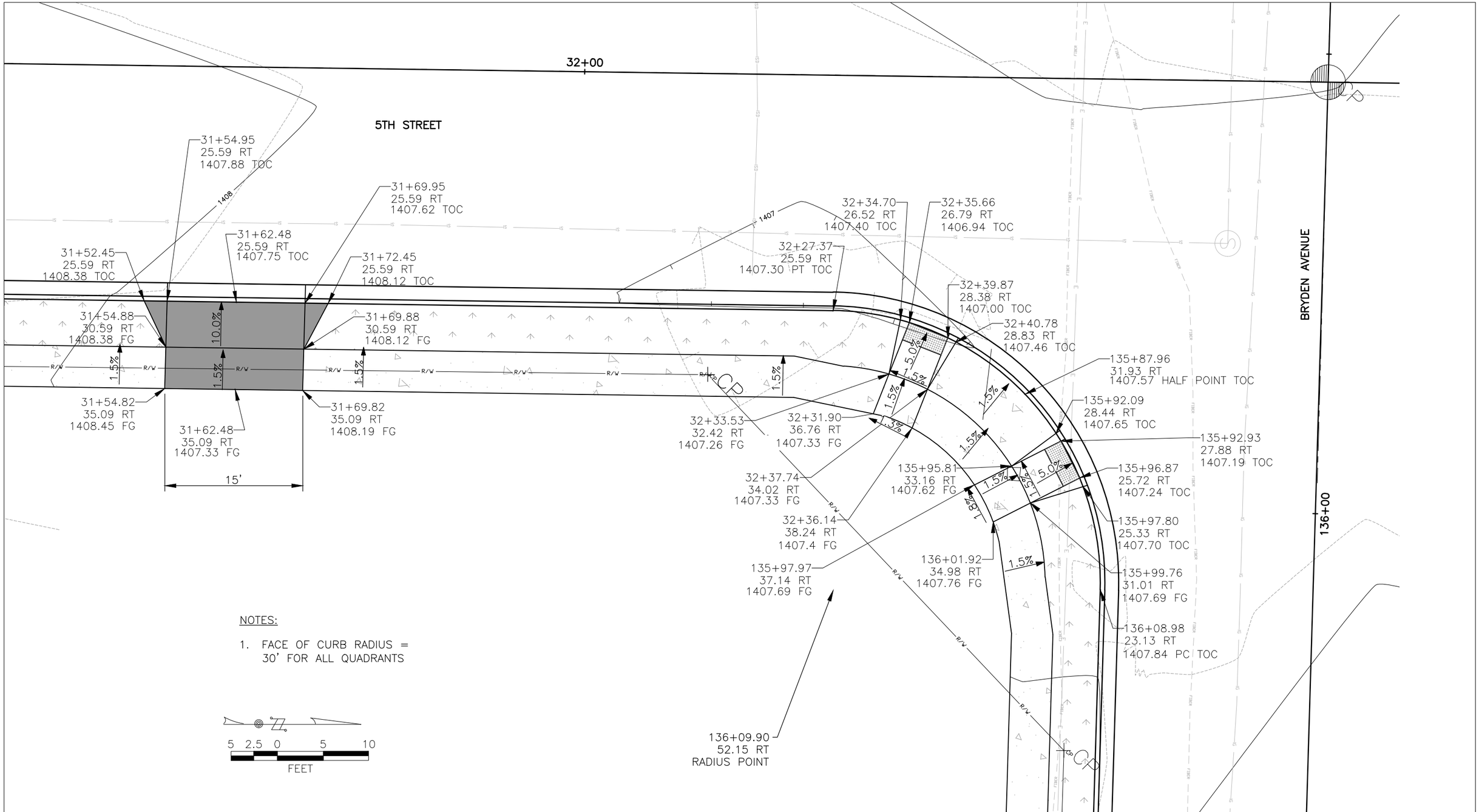

NOTES:

1. FACE OF CURB RADIUS = 30' FOR ALL QUADRANTS

5 2.5 0 5 10
FEET

REVISIONS	
DATE	DESCRIPTION

DESIGNED: WER
DESIGN CHECKED: GEH
DETAILED: WER
DRAWING APPROVED: PAO

SCALES SHOWN ARE FOR 11" X 17" PRINTS ONLY
CADD FILE NAME L18-051_17.dwg
DRAWING DATE: FEBRUARY, 2020

IDAHO TRANSPORTATION DEPARTMENT
TD&H ENGINEERING

PROJECT NO.
TR036

SOUTH CURB RAMP DETAIL
BRYDEN AVENUE & 5TH STREET INTERSECTION
LEWISTON, IDAHO

English
COUNTY NEZ PERCE
KEY NUMBER XXXXX
SHEET 17 OF 73

PROFESSIONAL ENGINEER LICENSED 7654 02/28/2020 STATE OF IDAHO PHILLIP A. ODEGARD

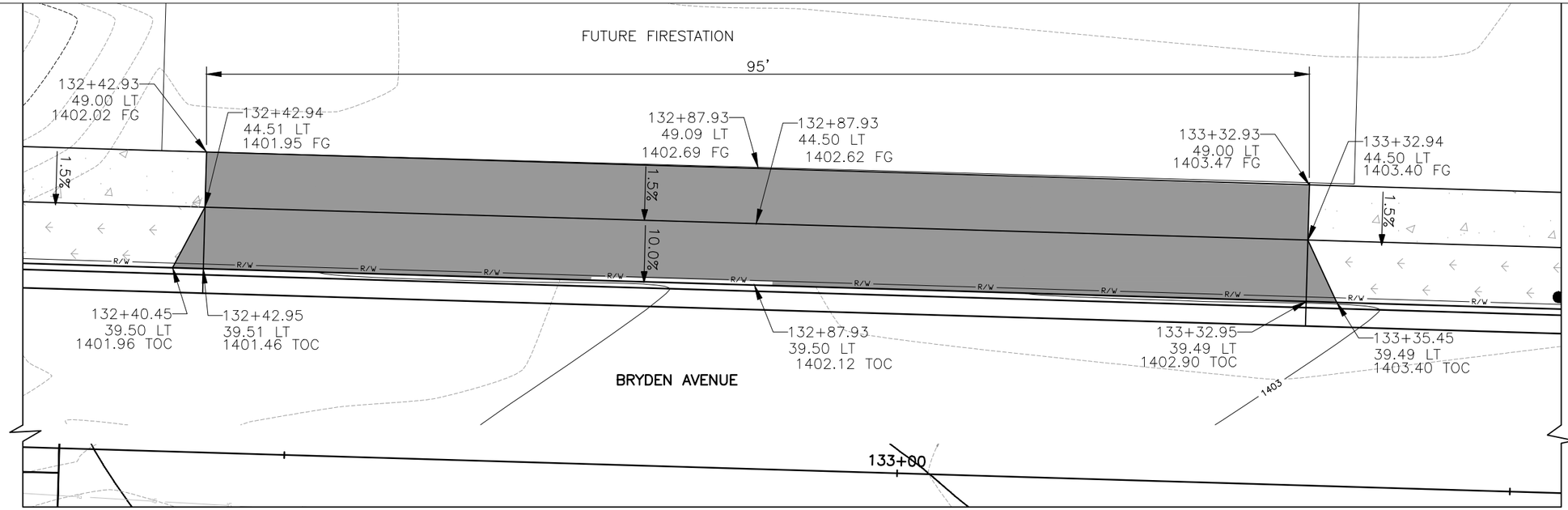

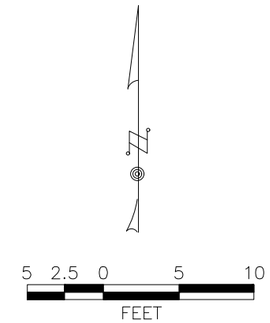

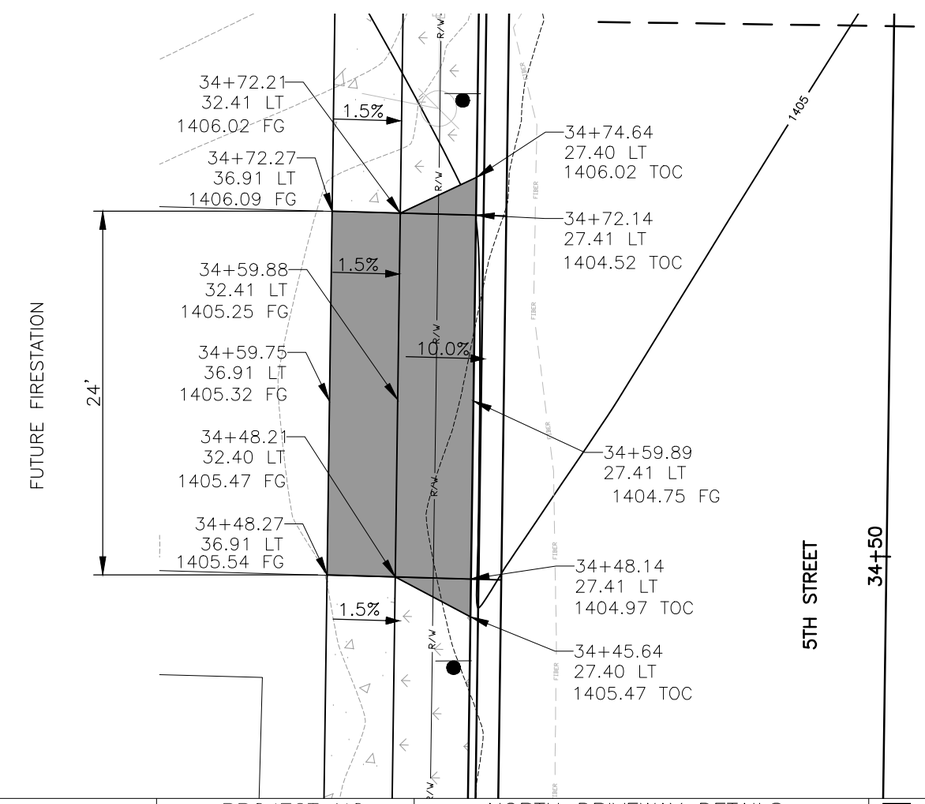

REVISIONS						
DATE	DESCRIPTION	DESIGNED: WER	SCALES SHOWN ARE FOR 11" X 17" PRINTS ONLY	IDAHO TRANSPORTATION DEPARTMENT	PROJECT NO.	NORTH DRIVEWAY DETAILS
		DESIGN CHECKED: GEH			TR036	BRYDEN AVENUE & 5TH STREET INTERSECTION LEWISTON, IDAHO
		DETAILED: WER	CADD FILE NAME L18-051_18.dwg			
		DRAWING APPROVED: PAO	DRAWING DATE: FEBRUARY, 2020	TD&H ENGINEERING		

English
COUNTY NEZ PERCE
KEY NUMBER XXXXX
SHEET 18 OF 73

PROFESSIONAL ENGINEER LICENSED 7654 02/28/2020 STATE OF IDAHO PHILLIP A. ODEGARD

ITEM	QTY.	ITEM 656-005A – TRAFFIC SIGNAL INSTALLATION
		CONTRACTOR SUPPLIED MATERIALS
1	1 EA.	TRAFFIC SIGNAL CABINET: FURNISH CABINET MEETING ALL ITD NEMA TS2 TYPE 1 SIGNAL CABINET SPECIFICATIONS, WITH UNINTERRUPTED POWER SUPPLY (UPS) BATTERY BACKUP SYSTEM (BBS), SURGE AND POWER DISTRIBUTION PANEL FOR FOUR VIDEO CAMERAS. ECONOLITE TS2/T1 TYPE "P" NEMA CABINET
2	1 EA.	TRAFFIC SIGNAL CONTROLLER: FURNISH CONTROLLER IN CONJUNCTION WITH SIGNAL CABINET, MEETING ALL ITD NEMA TS2 TYPE 1. ECONOLITE COBALT CONTROLLER, NEXUS 9 TABLED, WI-FI ADAPTER KIT W/ ROUTER AND CABLE, RENO MMU2-16LE(IP)-E SMART MONITOR, RENO A&E LOAD SWITCH, RENO A&E FLASHER, RENO A&E FLASH TRANSFER RELAY, BUS INTERFACE UNITS, PDC MODEL 252 AC ISOLATOR, UPSTEALTH NEMA INVERTER, UPSTEALTH 500W NEMA BATTERIES, UPSTEALTH POWER INTERFACE MODULE, UPSTEALTH INCOMING POWER BLOCK(TBS) WIRING, AUTOSCOPE DUO INTERFACE PANEL AND DETECTION MODULE, PIER TO PIER FIBER INTERCONNECT.
3	1 EA.	POLE A: STEEL COMBINATION TRAFFIC SIGNAL AND LUMINAIRE, WITH 42' SIGNAL MAST ARM AND 15' LUMINAIRE MAST ARM WITH 2" SLIP FITTER (LUMINAIR MOUNTING HEIGHT TO BE 30'). VALMONT, REFERENCE ITD STANDARD SPECIFICATION 713.08 FOR SIGNAL POLES AND 713.09 FOR LUMINARIES.
4	1 EA.	POLE B: STEEL COMBINATION TRAFFIC SIGNAL AND LUMINAIRE, WITH 54' SIGNAL MAST ARM AND 15' LUMINAIRE MAST ARM WITH 2" SLIP FITTER (LUMINAIR MOUNTING HEIGHT TO BE 30'). VALMONT, REFERENCE ITD STANDARD SPECIFICATION 713.08 FOR SIGNAL POLES AND 713.09 FOR LUMINARIES.
5	1 EA.	POLE C: STEEL COMBINATION TRAFFIC SIGNAL AND LUMINAIRE, WITH 36' SIGNAL MAST ARM AND 10' LUMINAIRE MAST ARM WITH 2" SLIP FITTER (LUMINAIR MOUNTING HEIGHT TO BE 30'). VALMONT, REFERENCE ITD STANDARD SPECIFICATION 713.08 FOR SIGNAL POLES AND 713.09 FOR LUMINARIES.
6	1 EA.	POLE D; STEEL COMBINATION TRAFFIC SIGNAL AND LUMINAIRE, WITH 48' SIGNAL MAST ARM AND 15' LUMINAIRE MAST ARM WITH 2" SLIP FITTER (LUMINAIR MOUNTING HEIGHT TO BE 30'). VALMONT, REFERENCE ITD STANDARD SPECIFICATION 713.08 FOR SIGNAL POLES AND 713.09 FOR LUMINARIES.
7	2 EA.	PEDESTRIAN POLE: STEEL POLE WITH MOUNTING HEIGHT OF 8' AND MEETS ITD STANDARD SPECIFICATION 713.08 FOR PEDESTRIAN SIGNAL POLES. PELCO PB-5334-PNC, PB-5325-PNC, PB-5306-GLV (POLES E & F)
8	11 EA.	VEHICLE SIGNAL HEAD: EMPTY 12" DIAMETER SIGNAL HEAD, 3 SECTION, REFERENCE ITD STANDARD SPECIFICATION 713.11 FOR VEHICLE SIGNAL HEADS. ECONOLITE STP31VDAB11N-11-11 W/ ECONOLITE 06-1001-011 VISOR AND ECONOLITE 5" REFLECTIVE BACKPLATE .
9	4 EA.	VEHICLE SIGNAL HEAD: EMPTY 12" DIAMETER SIGNAL HEAD, 4 SECTION. REFERENCE ITD STANDARD SPECIFICATION 713.11 FOR VEHICLE SIGNAL HEADS. ECONOLITE STP4BVDAB11N-11-11 W/ ECONOLITE 06-1001-011 VISOR AND ECONOLITE 5" REFLECTIVE BACKPLATE.
10	11 EA.	SIGNAL BRACKETS: TRAFFIC SIGNAL ONE-WAY, 3 SECTION, CLAMP MOUNT FOR MAST ARM MOUNTING. PELCO AS-0125-3-96-SS. (SIGNAL HEAD NO. 21, 22, 41, 42, 61, 81, 82)
11	4 EA.	SIGNAL BRACKETS: TRAFFIC SIGNAL ONE-WAY, 4 SECTION, CLAMP MOUNT FOR MAST ARM MOUNTING. PELCO AS-0125-4-96-SS. (SIGNAL HEAD NO. 11, 31, 51, 71)
12	4 EA.	SIGNAL BRACKETS: TRAFFIC SIGNAL ONE-WAY FOR SIDE OF POST TERMINAL COMPARTMENT MOUNTING FOR 12" THREE SECTION TRAFFIC SIGNAL. ECONOLITE FWA2102BG. (SIGNAL HEAD NO. 23, 43, 62, 83)
13	8 EA.	PEDESTRIAN SIGNAL HEAD: 16", 2 SECTION HEAD WITH COUNTDOWN, ORANGE HAND/WALKING FIGURE. ECONOLITE PED16SGSNN9. REFERENCE ITD STANDARD SPECIFICATION 713.11 FOR PEDESTRIAN SIGNAL HEADS.
14	2 EA.	PEDESTRIAN SIGNAL MOUNTING: SIDE OF POST, TWO SIGNALS. ECONOLITE FW5202BG (SIGNAL HEAD NO. 21P, 41P, 42P, 62P)
15	2 EA.	PEDESTRIAN SIGNAL MOUNTING: SIDE OF POST, ONE SIGNAL. ECONOLITE FW5200BG (SIGNAL HEAD NO. 22P, 61P)
16	2 EA.	PEDESTRIAN SIGNAL HEAD MOUNTING: TOP OF POST, ONE-WAY SIGNAL. ECONOLITE FW5242BG (SIGNAL HEAD NO. 81P, 82P)
17	8 EA.	PEDESTRIAN PUSHBUTTON ASSEMBLY: INCLUDE MOUNTING ASSEMBLY, CHROME PUSHBUTTON SWITCH, CAMPBELL COMPANY PUSHBUTTON ASSEMBLY 501-0801/512 W/ R10-3e, MEETING ITD STANDARD SPECIFICATION 713.08 SIGNAL POLES REGARDING PUSHBUTTONS.

ITEM	QTY.	ITEM 656-005A – TRAFFIC SIGNAL INSTALLATION
		CONTRACTOR SUPPLIED MATERIALS
18	4 EA.	VEHICLE SIGNAL LAMPS (RED ARROW): 12" LED 120V, DAILIGHT 432-1314-001X0D15. SEE ITD STANDARD SPECIFICATION 713.11 FOR SIGNAL HEADS AND 713.12 FOR SIGNAL HEAD COVERS.
19	4 EA.	VEHICLE SIGNAL LAMPS (YELLOW ARROW): 12" LED 120V, DAILIGHT 431-3334-901X0D15.
20	4 EA.	VEHICLE SIGNAL LAMPS (GREEN ARROW): 12" LED 120V, DAILIGHT 432-2324-001X0D15.
21	10 EA.	VEHICLE SIGNAL LAMPS (RED BALL): 12" LED 120V, DAILIGHT 433-1210-003XL15.
22	10 EA.	VEHICLE SIGNAL LAMPS (YELLOW BALL): 12" LED 120V, DAILIGHT 433-3230-901XL15.
23	10 EA.	VEHICLE SIGNAL LAMPS (GREEN BALL): 12" LED 120V, DAILIGHT 433-2270-001XL15.
24	1 EA.	FOUNDATION: TYPE "A" FOUNDATION FOR PEDESTRIAN SIGNAL POLE "E" AND "F". REFERENCE ITD STANDARD 713.10 BASE BREAKAWAY DEVICE AND 656.02 TRAFFIC SIGNAL INSTALLATION
25	4 EA.	FOUNDATION: TYPE "D" FOUNDATION FOR SIGNAL POLES "A", "B", "C", AND "D". REFERENCE ITD STANDARD 713.10 BASE BREAKAWAY DEVICE AND 656.02 TRAFFIC SIGNAL INSTALLATION
26	7 EA.	JUNCTION BOX: PRECAST SIZE C CONCRETE, WITH STEEL LID. H2 PRE-CAST, INC. VBIDTC, OR APPROVED EQUAL. REFERENCE ITD STANDARD SPECIFICATIONS 713.05 CONCRETE JUNCTION BOXES
27	4 EA.	CAMERA BRACKET: 2-PIECE, EXTENDED TILE AND PAN, CLAMP MOUNTED. PELCO AS-0169-74-62 WITH CAMERA MOUNTING BRACKET. PELCO AS-0175-74-62-SS-PNC
28	4 EA.	STREET NAME MASTARM SIGNS: D3-1, 2 SIGN 36" X 16", 2 SIGN 66" X 18" (SEE DETAIL SHEET)
29	2 EA.	STREET NAME SIGN MASTARM BRACKETS: CLAMP MOUNT. PELCO AS-0144-30-62-SS-PNC AND AS-014460-SS-PNC FOR POLES "A" AND "D"
30	2 EA.	STREET NAME SIGN MASTARM BRACKETS: CLAMP MOUNT. PELCO AS-0144-60-SS-PNC FOR POLES "A" AND "C"
31	1 EA.	MISCELLANEOUS HARDWARE: INCLUDES PLASTIC CONDUIT, WATERTIGHT STEEL ELBOWS, THWN WIRE, 600 VOLT 14 GAUGE 3C & 5C SIGNAL CABLE, AND VARIOUS ITEMS, HARDWARE, AND FITTINGS NECESSARY FOR THE COMPLETE SIGNAL AND LIGHTING INSTALLATION AS SHOWN ON PLANS.
*		S656-10A SP MULTIPLE APPROACH VIDEO DETECTION SYSTEM: AUTOSCOPE DUO SENSORS ADUOS(A700-1082-1), AUTOSCOPE DUO CABLES ADUOCLB250(214-101-508), 10.4 LCD MONITOR, MNC CONNECTORS, BNC STRAIGHT ADAPTER CONNECTORS
*		S904-05A SP EMERGENCY VEHICLE PRE-EMPT SYSTEM: GTT M764 PHASE SELECTOR, GTT M678 OPTICON INTERFACE PANEL, GTT M722 OPTICOM DETECTOR, M575 CONFIRMATION LIGHT KITS, M138 OPTICOM CABLE, PELCO ASTRO-MINI BRAC MOUNTS AB-0121-56-SS-PNC
		ILLUMINATION
1	4 EA.	LUMINAIRE: SLIP FITTER MOUNTING ON NOMINAL 2" DIAMETER PIPE BRACKETS, INTERNALLY MOUNTED 120-277V ELECTRONIC DRIVER, SURGE PROTECTOR MATCHING ELECTRONIC DRIVER SPECS, CCT BETWEEN 4000-4500K, CRI OF 70 OR GREATER, NVLAP INTENSITY AND CHROMATICITY CONFIRMED, MUST AVERAGE 100 LUMENS/WATT, MIN. 12,000-30,000 LUMENS. GE ERL1-0-09-B3-40-D-GRAY SEE ITD STANDARD SPECIFICATIONS 713.01 FOR LUMINAIRES.
2	8 EA.	WIRE CONNECTOR KIT: FUSED INLINE, WATER RESISTANT, RATED 600 V, 30 A, 2 KITS PER POLE, TO BE BUSSMAN HEB-JW-RLC-J OR APPROVED EQUAL
3	8 EA.	FUSES: 8 AMP, CARTRIDGE, 2 PER POLE, TO BE BUSSMAN KT-8 OR APPROVED EQUAL
4	1 EA	MICELLANEOUS: 2" PC CONDUIT, THWN WIRE, AND VARIOUS OTHER HARDWARE AND FITTINGS TO COMPLETE INSTALLATION.

NOTES:

1. 350 L.F. 2" PC CONDUIT WILL BE NEEDED TO EXTEND EX. LINES TO NEW JUNCTION BOXES AND SIGNALS
2. IF EX. CONDUIT ISN'T USABLE, 1500 L.F. OF 2" PC CONDUIT WILL BE NEEDED. SEE MATERIALS LIST SUMMARY, S900-50A

REVISIONS	
DATE	DESCRIPTION

DESIGNED	WER	SCALES SHOWN ARE FOR 11" X 17" PRINTS ONLY
DESIGN CHECKED	GEH	
DETAILED	WER	CADD FILE NAME L18-051_19.dwg
DRAWING CHECKED	PAO	DRAWING DATE: FEBRUARY, 2020

IDAHO TRANSPORTATION DEPARTMENT

TD&H ENGINEERING

PROJECT NO.: TR036

SIGNAL MATERIALS SUMMARY

BRYDEN AVENUE & 5TH STREET INTERSECTION

English

COUNTY: NEZ PERCE

KEY NUMBER: XXXXX

SHEET 19 OF 73

PROFESSIONAL ENGINEER LICENSED 7654 STATE OF IDAHO PHILLIP A. ODEGARD 02/28/2020

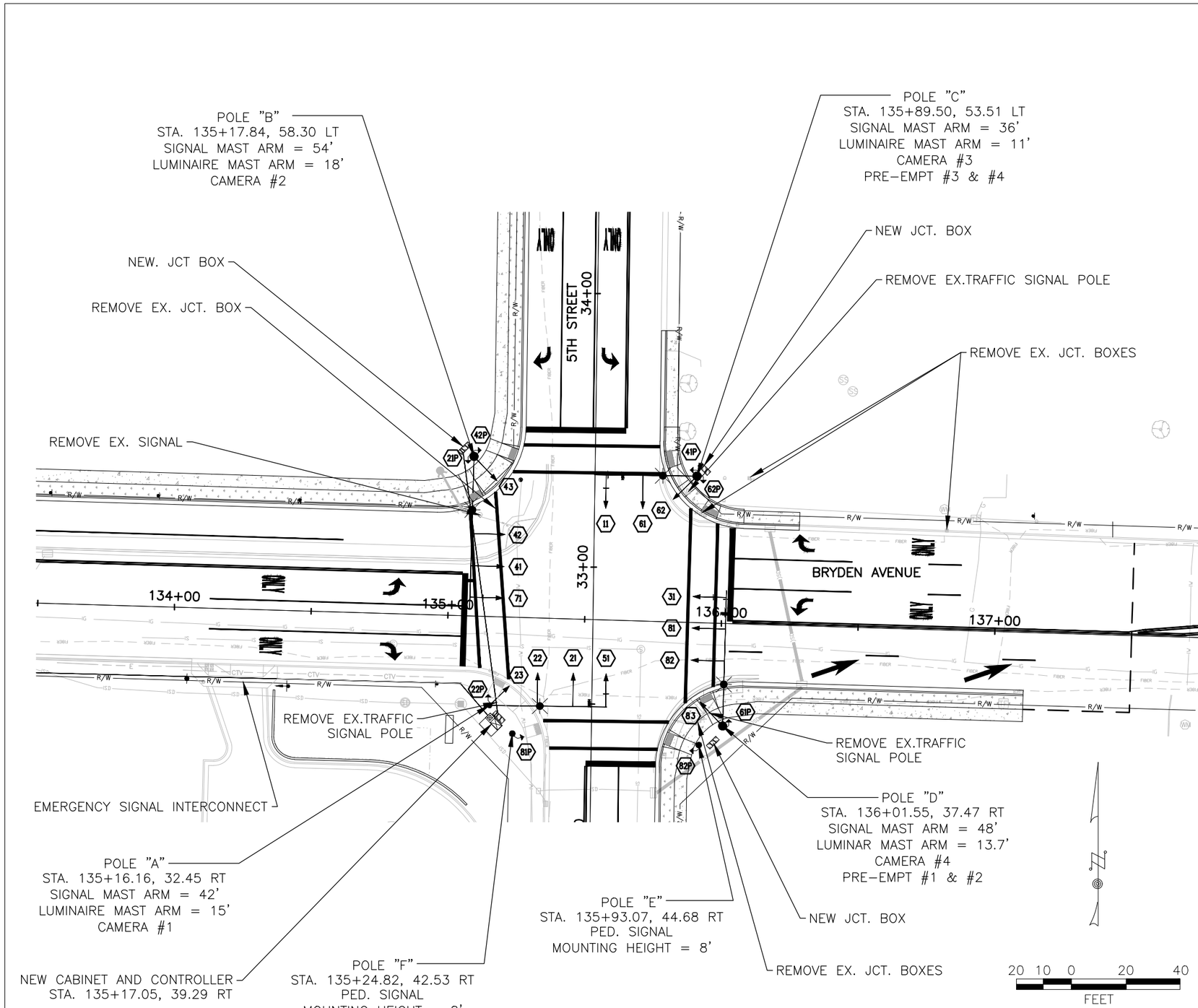

NOTE:

1. ABANDON IN PLACE EXISTING LOOP DETECTORS ON ALL STREETS.

2. REMOVE MDS RADIO INTERCONNECT FROM EXISTING SIGNAL CABINET AND INSTALL IN NEW CABINET.

3. REUSE EXISTING CONDUIT UNLESS SPECIFIED BY PROJECT ENGINEER.

LEGEND

- JUNCTION BOX
- EXIST.JUNCTION BOX
- LUMINAIRE W/ARM
- SIGNAL HEAD (3 SECTION)
- SIGNAL HEAD (4 SECTION)
- PEDESTRIAN HEAD SIGNAL
- POLE W/MAST ARM
- VIDEO CAMERA
- PEDESTRIAN POLE
- PREEMPT DETECTOR/INDICATOR
- CONTROLLER & SERVICE PEDESTAL
- SIGNAL HEAD NUMBER.
- PEDESTRIAN HEAD NUMBER

LIGHTING SPECIFICATIONS

ILLUMINATION	LIGHT EMITTING DIODE (LED)
LUMINAIRES	200 WATT MAX.
INTENSITY	Eavg = 1.8 FC Eavg/Emin = 3.0 MAX.
DISTRIBUTION	TYPE III
CIRCUITRY	UNDERGROUND CONDUIT
SERVICE	PEDESTAL MOUNTED 120/240 VOLT
SUPPORT	GALVANIZED STEEL POLES AND STANDARD EXTENSIONS ON SIGNAL POLES

NOTES:

1. INSTALL ALL TRAFFIC CONTROL DEVICES IN CONFORMANCE WITH THE MANUAL ON UNIFORM TRAFFIC CONTROL DEVICES (MUTCD), AS ADOPTED BY THE STATE.
2. SEE "PHASING AND CONDUIT PLAN", "SIGNAL FEILD WIRIING DIAGRAM", "VIDEO DETECTION DIAGRAM", & "SIGNAL HEAD AND SIGN MOUNTING DETAILS" SHEETS FOR FURTHER SIGNAL DETAIL.
3. CONDUIT EXTENSIONS WILL BE NEEDED FROM EXISTING JUNCTION BOXES TO NEW JUNCTION BOXES BEHIND SIGNAL POLE.
4. POTHOLE LOCATION OF PROPOSED POLE AND CABINET FOUNDATIONS PRIOR TO CONSTRUCTION AND PRIOR TO ORDERING SIGNAL EQUIPMENT. BRING ANY CONFLICTS IMMEDIATELY TO THE ATTENTION OF THE ENGINEER.
5. INSTALL TYPE D SIGNAL POLE FOUNDATIONS FOR ALL SIGNAL POLES. USE TYPE A FOUNDATIONS FOR PED. POLES.
6. VERIFY AND CHECK ALL DIMENSIONS AND DETAILS SHOWN ON THE DRAWINGS PRIOR TO THE START OF CONSTRUCTION. BRING ANY DISCREPANCIES IMMEDIATELY TO THE ATTENTION OF THE ENGINEER FOR CLARIFICATIONS.
7. SPACING PLANS SHOWN ARE VIRTUAL ZONES FOR VIDEO DETECTION.
8. LEFT-TURN PHASE QUEUE ZONES (50' FROM STOP BAR) ARE TO BE SET IN NON-LOCKING MODE. RIGHT TURN LANE ZONES ARE TO BE SET IN TIME DELAY & NON-LOCKING MODE.
9. KEEP EXISTING SIGNAL IN OPERATION UNTIL NEW SIGNAL EQUIPMENT IS INSTALLED AND READY FOR SWITCHOVER IN CONTROLLER CABINET.

REVISIONS	
DATE	DESCRIPTION

DESIGNED:	WER
DESIGN CHECKED:	GEH
DETAILED:	WER
DRAWING APPROVED:	PAO

SCALES SHOWN ARE FOR 11" X 17" PRINTS ONLY

CADD FILE NAME L18-051_20.dwg

DRAWING DATE: FEBRUARY, 2020

IDAHO TRANSPORTATION DEPARTMENT

TD&H ENGINEERING

PROJECT NO. TR036

TRAFFIC SIGNAL PLAN

BRYDEN AVENUE & 5TH STREET INTERSECTION LEWISTON, IDAHO

English

COUNTY NEZ PERCE

KEY NUMBER XXXXX

SHEET 20 OF 73

PROFESSIONAL ENGINEER LICENSED 7654 02/28/2020 STATE OF IDAHO PHILLIP A. ODEGARD

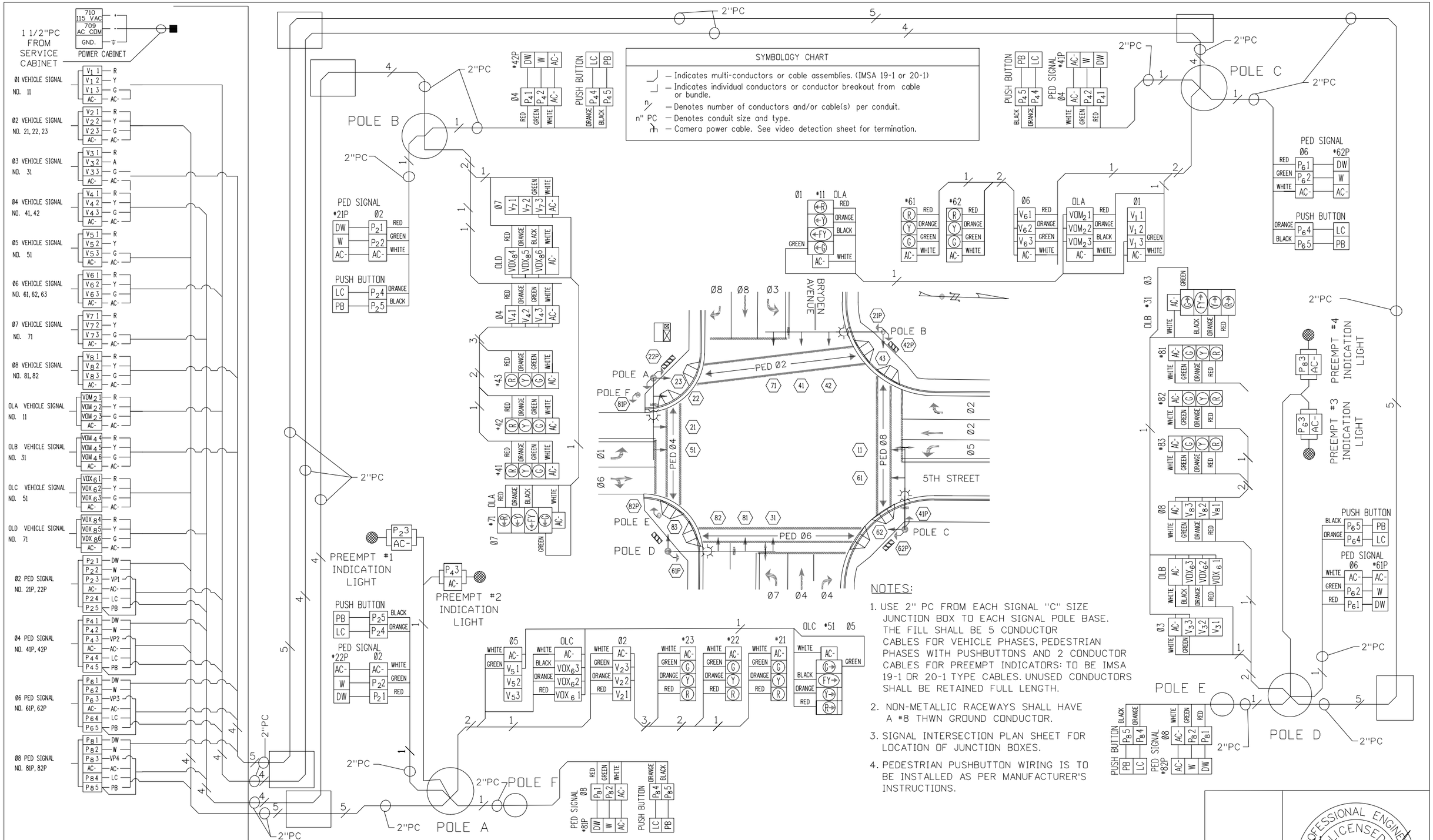

NOTES:

1. USE 2" PC FROM EACH SIGNAL "C" SIZE JUNCTION BOX TO EACH SIGNAL POLE BASE. THE FILL SHALL BE 5 CONDUCTOR CABLES FOR VEHICLE PHASES, PEDESTRIAN PHASES WITH PUSHBUTTONS AND 2 CONDUCTOR CABLES FOR PREEMPT INDICATORS: TO BE IMSA 19-1 OR 20-1 TYPE CABLES. UNUSED CONDUCTORS SHALL BE RETAINED FULL LENGTH.
2. NON-METALLIC RACEWAYS SHALL HAVE A #8 THWN GROUND CONDUCTOR.
3. SIGNAL INTERSECTION PLAN SHEET FOR LOCATION OF JUNCTION BOXES.
4. PEDESTRIAN PUSHBUTTON WIRING IS TO BE INSTALLED AS PER MANUFACTURER'S INSTRUCTIONS.

REVISIONS	
DATE	DESCRIPTION

DESIGNED:	WER	SCALES SHOWN ARE FOR 11" X 17" PRINTS ONLY
DESIGN CHECKED:	GEH	
DETAILED:	WER	CADD FILE NAME L18-051_21.dwg
DRAWING APPROVED:	PAO	DRAWING DATE: FEBRUARY, 2020

IDAHO TRANSPORTATION DEPARTMENT

TD&H ENGINEERING

PROJECT NO. TR036

SIGNAL FIELD WIRING DIAGRAM

BRYDEN AVENUE & 5TH STREET INTERSECTION LEWISTON, IDAHO

English

COUNTY NEZ PERCE

KEY NUMBER XXXXX

SHEET 21 OF 73

PROFESSIONAL ENGINEER LICENSED 7654 02/28/2020 STATE OF IDAHO PHILLIP A. ODEGARD

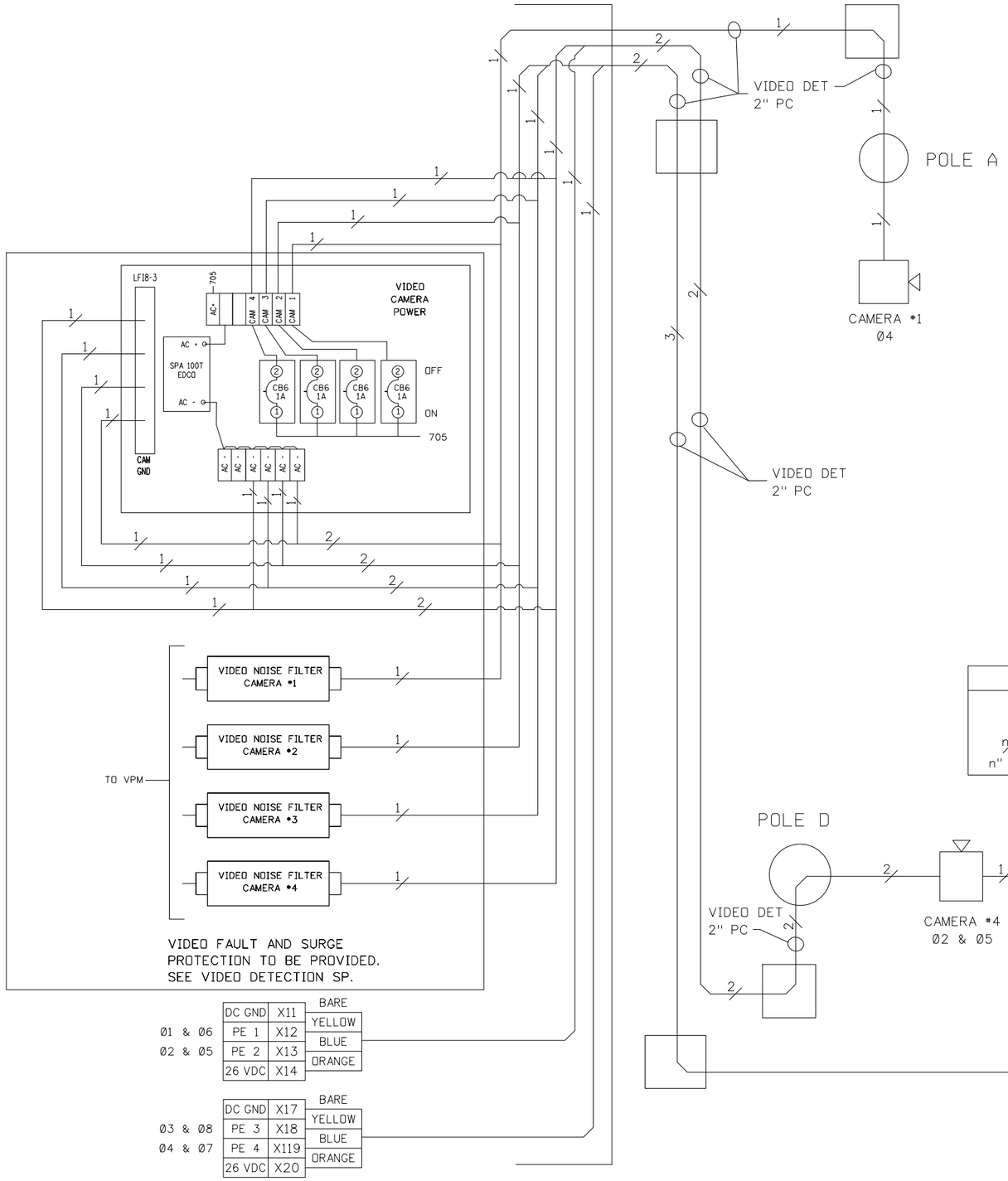

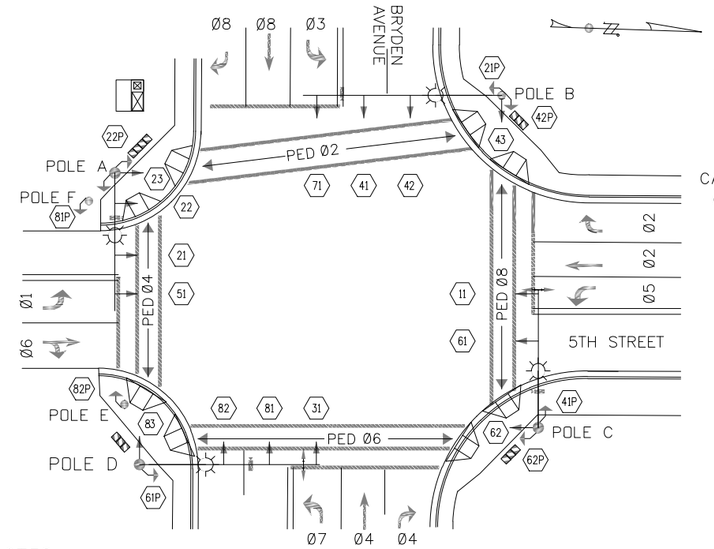

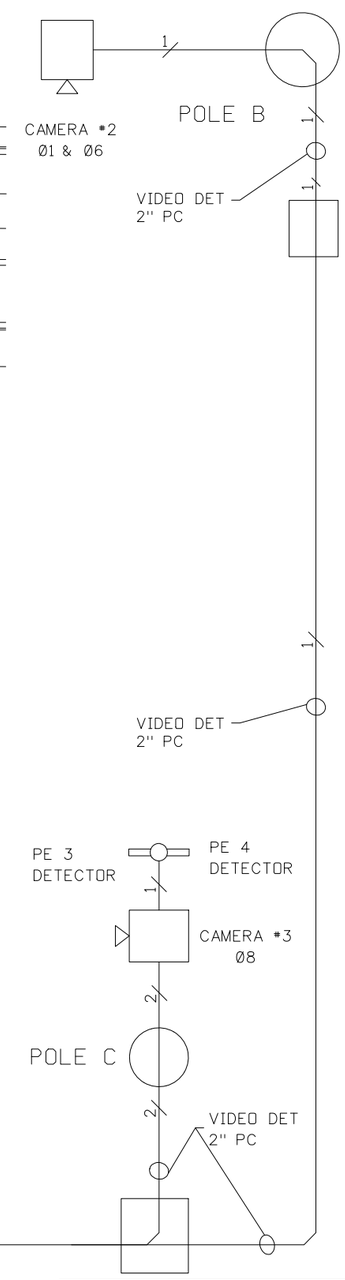

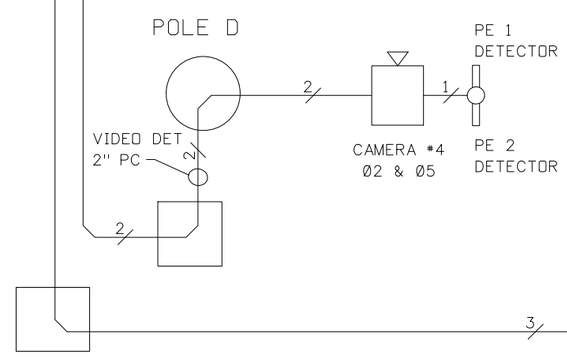

NOTES:

1. USE 2" PC FROM EACH SIGNAL SIZE "PGC" JUNCTION BOX TO EACH SIGNAL POLE BASE.
2. ALL NON-METALLIC RACEWAYS SHALL HAVE A #8 THWN GROUND CONDUCTOR.
3. SEE SIGNAL INTERSECTION PLAN SHEET FOR LOCATION OF JUNCTION BOXES.
4. VIDEO DETECTION CABLE SHALL BE TO THE MANUFACTURE'S SPECIFICATIONS. LEAVE 10' OF SPARE WIRE AT THE CABINET AND AT THE CAMERA LOCATIONS.

SYMBOLOGY CHART
— Indicates multi-conductors or cable assemblies. (IMSA 19-1 or 20-1)
— Indicates individual conductors or conductor breakout from cable or bundle.
n/ — Denotes number of conductors and/or cable(s) per conduit.
n" PC — Denotes conduit size and type.

REVISIONS	
DATE	DESCRIPTION

DESIGNED: WER
DESIGN CHECKED: GEH
DETAILED: WER
DRAWING APPROVED: PAO

SCALES SHOWN ARE FOR 11" X 17" PRINTS ONLY
CADD FILE NAME L18-051_22.dwg
DRAWING DATE: FEBRUARY, 2020

IDAHO TRANSPORTATION DEPARTMENT
TD&H ENGINEERING

PROJECT NO. TR036

VIDEO DETECTION DIAGRAM
BRYDEN AVENUE & 5TH STREET INTERSECTION
LEWISTON, IDAHO

English
COUNTY NEZ PERCE
KEY NUMBER XXXXX
SHEET 22 OF 73

PROFESSIONAL ENGINEER
LICENSED
7654
02/28/2020
STATE OF IDAHO
PHILLIP A. ODEGARD

PHASING DIAGRAM

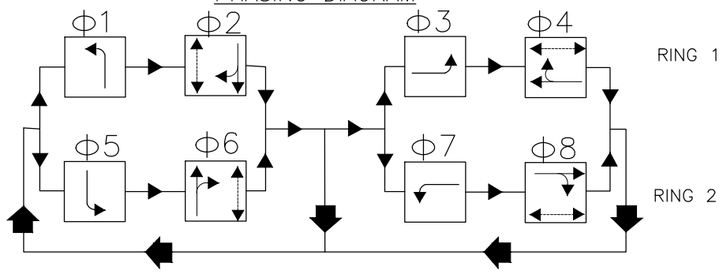

SIGNAL SEQUENCE CHART

PHASE	VEHICLE HEADS								PEDESTRIAN HEADS				CLEARANCE
	11	21–23	31	41–43	51	61–63	71	81–82	21P–22P	41P–42P	61P–62P	81P–82P	
Φ1	R	R	R	R	G	R	R	R	DW	DW	DW	DW	VEHICLE
	R	R	R	R	Y	R	R	R	DW	DW	DW	DW	
Φ2	R	G	R	R	FY	R	R	R	DW	W	DW	DW	PEDESTRIAN
	R	G	R	R	FY	R	R	R	DW	FDW	DW	DW	
	R	Y	R	R	Y	R	R	R	DW	DW	DW	DW	
Φ3	R	R	R	R	R	R	G	R	DW	DW	DW	DW	VEHICLE
	R	R	R	R	R	R	Y	R	DW	DW	DW	DW	
Φ4	R	R	R	G	R	R	FY	R	DW	DW	W	DW	PEDESTRIAN
	R	R	R	G	R	R	FY	R	DW	DW	FDW	DW	
	R	R	R	Y	R	R	Y	R	DW	DW	DW	DW	
Φ5	G	R	R	R	R	R	R	R	DW	DW	DW	DW	VEHICLE
	Y	R	R	R	R	R	R	R	DW	DW	DW	DW	
Φ6	FY	R	R	R	R	G	R	R	DW	DW	DW	W	PEDESTRIAN
	FY	R	R	R	R	G	R	R	DW	DW	DW	FDW	
	Y	R	R	R	R	Y	R	R	DW	DW	DW	DW	
Φ7	R	R	G	R	R	R	R	R	DW	DW	DW	DW	VEHICLE
	R	R	Y	R	R	R	R	R	DW	DW	DW	DW	
Φ8	R	R	FY	R	R	R	R	G	W	DW	DW	DW	PEDESTRIAN
	R	R	FY	R	R	R	R	G	FDW	DW	DW	DW	
	R	R	Y	R	R	R	R	Y	DW	DW	DW	DW	
FLASH	R	R	R	R	R	R	R	R					

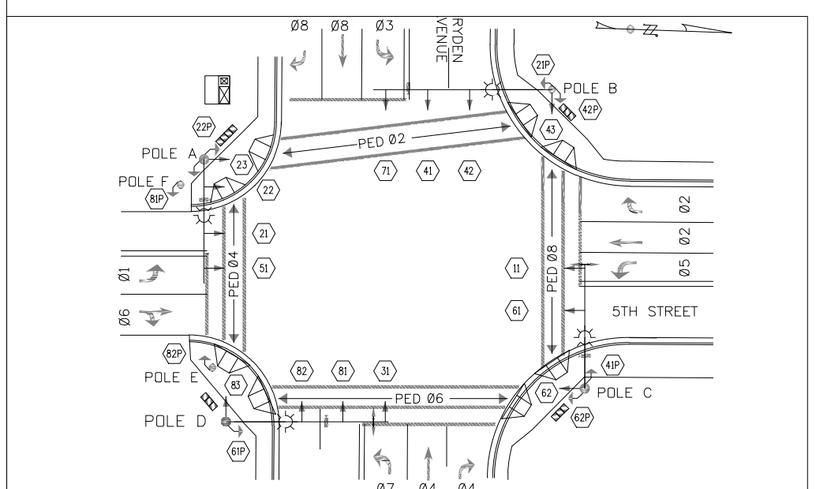

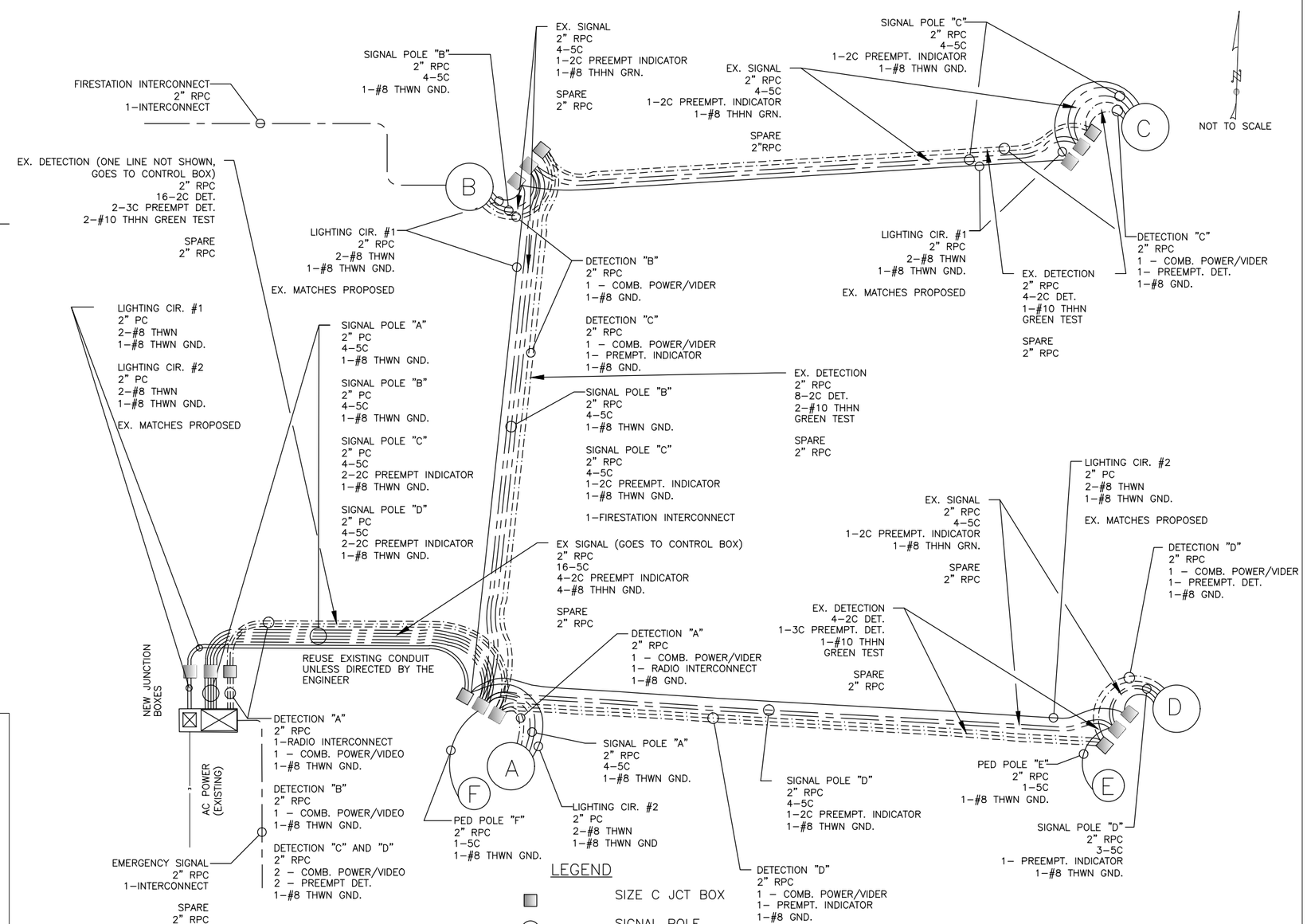

LEGEND

- SIZE C JCT BOX
- SIGNAL POLE
- CONTROLLER & SERVICE PEDESTAL
- LIGHTING CONDUIT
- DETECTION CONDUIT
- SIGNAL CONDUIT
- POWER SOURCE

NOTES:

1. PER SECTION 656, TRENCHING, BACKFILLING, SURFACING, AND MATERIALS ARE INCIDENTAL. REPLACE PAVEMENT PER CITY OF LEWISTON STANDARDS.
2. ATTACH BATTERY BACKUP AT CONTROL BOX

REVISIONS	
DATE	DESCRIPTION

DESIGNED: WER
DESIGN CHECKED: GEH
DETAILED: WER
DRAWING APPROVED: PAO

SCALES SHOWN ARE FOR 11" X 17" PRINTS ONLY

CADD FILE NAME L18–051_23.dwg

DRAWING DATE: FEBRUARY, 2020

IDAHO TRANSPORTATION DEPARTMENT

TD&H ENGINEERING

PROJECT NO. TR036

PHASING & CONDUIT DIAGRAM

BRYDEN AVENUE & 5TH STREET INTERSECTION LEWISTON, IDAHO

English

COUNTY NEZ PERCE

KEY NUMBER XXXXX

SHEET 23 OF 73

PROFESSIONAL ENGINEER LICENSED 7654 02/28/2020 STATE OF IDAHO PHILLIP A. ODEGARD

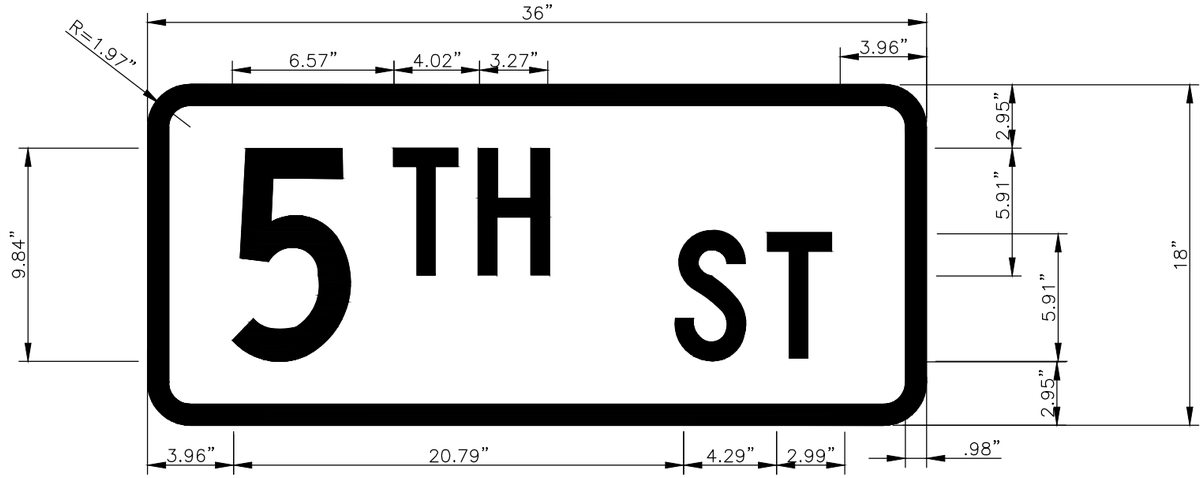

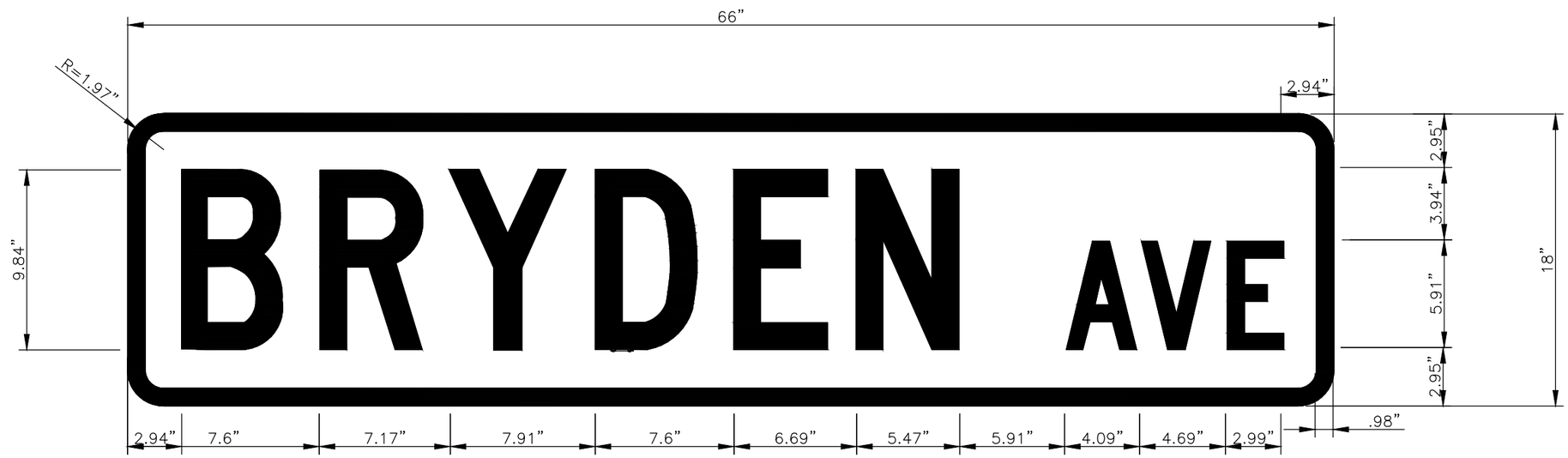

REVISIONS	DESIGNED: WER	SCALES SHOWN ARE FOR 11" X 17" PRINTS ONLY	IDAHO TRANSPORTATION DEPARTMENT	PROJECT NO.	SIGN DETAILS	English
DESCRIPTION	DESIGN CHECKED: GEH			TR036	BRYDEN AVENUE & 5TH STREET INTERSECTION LEWISTON, IDAHO	COUNTY NEZ PERCE
	DETAILED: WER	CADD FILE NAME L18-051_24.dwg				KEY NUMBER XXXXX
	DRAWING APPROVED: PAO	DRAWING DATE: FEBRUARY, 2020	TD&H ENGINEERING			SHEET 24 OF 73

PROFESSIONAL ENGINEER LICENSED 7654 02/28/2020 STATE OF IDAHO PHILLIP A. ODEGARD

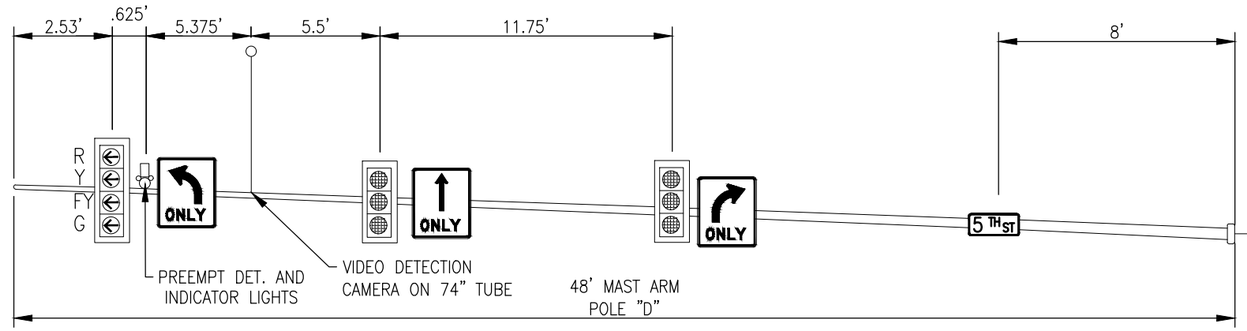

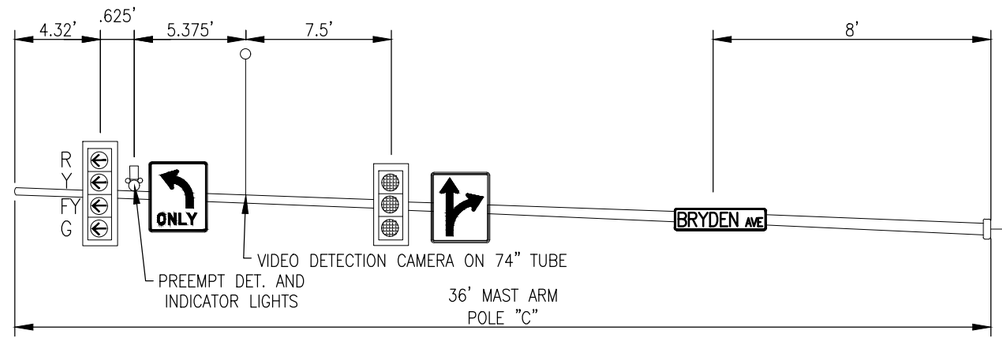

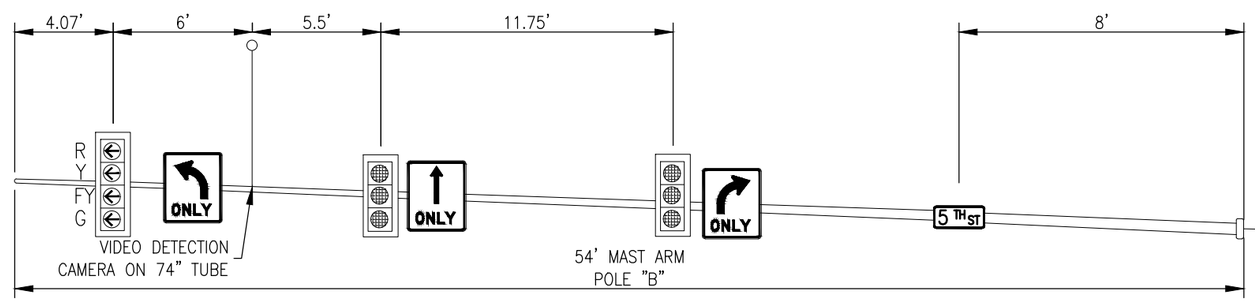

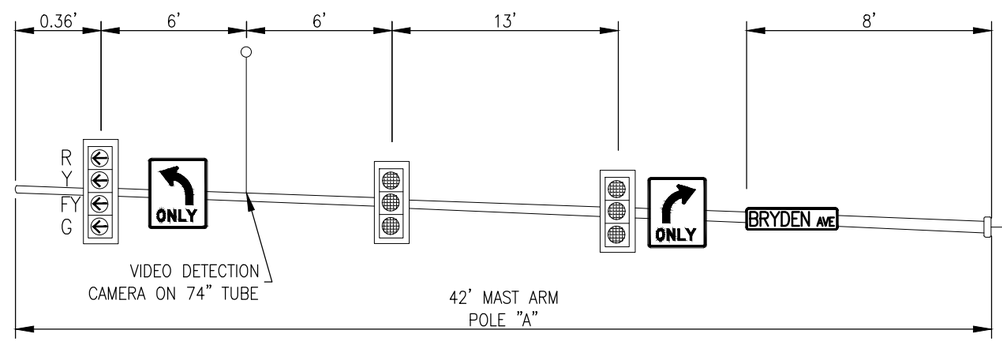

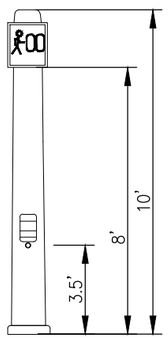

TYPICAL PEDESTRIAN POLE

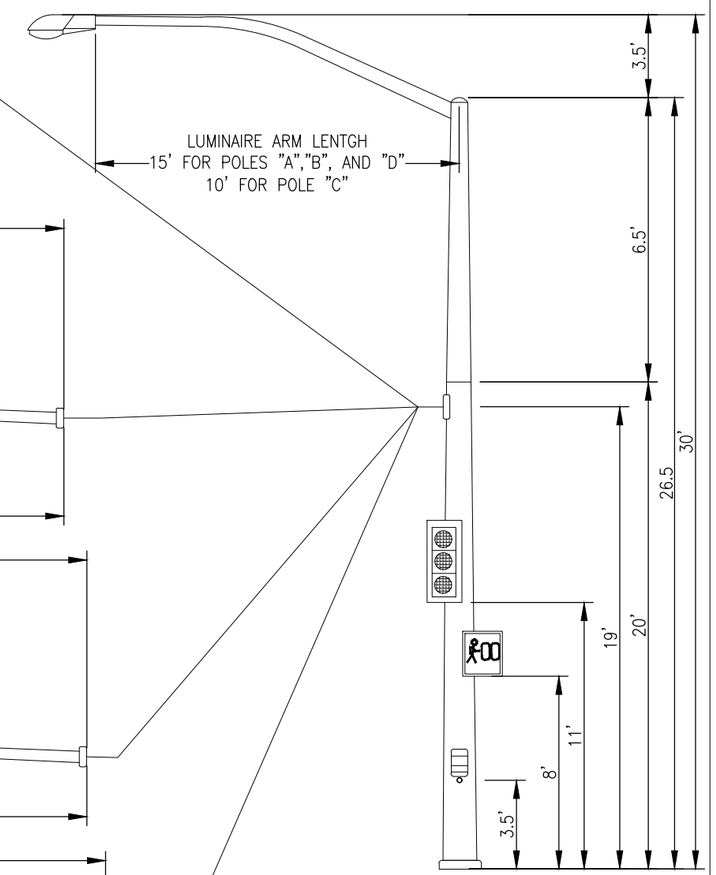

TYPICAL SIGNAL POLE

NOTES:

1. VIDEO CAMERA LOCATIONS SHOWN ARE APPROXIMATE. EXACT LOCATIONS TO BE DETERMINED ON SITE BY A MANUFACTURES SITE SURVEY.
2. ALL SIGNING AND MOUNTING BRACKETS SHOWN ON THIS SHEET SHALL NOT BE PAID FOR SEPARATELY, BUT CONSIDERED INCIDENTAL TO ITEM 656-005A TRAFFIC SIGNAL INSTALLATION.
3. SEE "TRAFFIC SIGNAL PLAN" SHEET FOR LUMINAIRE MAST ARM AND PEDESTRIAN SIGNAL HEAD ORIENTATION.
4. SEE "STANDARD DETAIL 656-1, TD-14A, AND TD-14B FOR MAST ARM INSTALLATION DETAILS.

REVISIONS	
DATE	DESCRIPTION

DESIGNED: WER	SCALES SHOWN ARE FOR 11" X 17" PRINTS ONLY	IDAHO TRANSPORTATION DEPARTMENT
DESIGN CHECKED: GEH		
DETAILED: WER	CADD FILE NAME L18-051_25.dwg	
DRAWING APPROVED: PAO	DRAWING DATE: FEBRUARY, 2020	TD&H ENGINEERING

PROJECT NO.: TR036

TRAFFIC SIGNAL MOUNTING DIAGRAM

BRYDEN AVENUE & 5TH STREET INTERSECTION
LEWISTON, IDAHO

English

COUNTY: NEZ PERCE

KEY NUMBER: XXXXX

SHEET 25 OF 73

PROFESSIONAL ENGINEER
LICENSED
7654
02/28/2020
STATE OF IDAHO
PHILLIP A. ODEGARD

ITEM	QTY.	ITEM S656-015A – EMERGENCY SIGNAL INSTALLATION
		CONTRACTOR SUPPLIED MATERIALS
1	1 EA.	TRAFFIC SIGNAL CABINET: FURNISH CABINET MEETING ALL ITD NEMA TS2 TYPE 1 SIGNAL CABINET SPECIFICATIONS AND SPECIAL PROVISION S656-015A
2	1 EA.	TRAFFIC SIGNAL CONTROLLER: FURNISH CONTROLLER IN CONJUNCTION WITH SIGNAL CABINET, MEETING ALL ITD NEMA TS2 TYPE 1 AND SPECIAL PROVISION S656-015A. ECONOLITE COPABLT CONTROLLER – SHELF MOUNTED FOUR (4) PHASE FULLY ACTUATED, DIGITAL, SOLID STATE TRAFFIC CONTROLLER, NEXUS 9 TABLED, RENO A&E LOAD SWITCH, RENO A&E FLASHER, RENO A&E FLASH TRANSFER RELAY, BUS INTERFACE UNITS, PDC MODEL 252 AC ISOLATOR, UPSTEALTH NEMA INVERTER, UPSTEALTH 500W NEMA BATTERIES, UPSTEALTH POWER INTERFACE MODULE, UPSTEALTH INCOMING POWER BLOCK (TBS) WIRING, PIER TO PIER FIBER INTERCONNECT.
3	1 EA.	POLE A: STEEL COMBINATION TRAFFIC SIGNAL AND LUMINAIRE, WITH 30' SIGNAL MAST ARM. VALMONT. REFERENCE ITD STANDARD SPECIFICATION 713.08 FOR SIGNAL POLES AND 713.09 FOR LUMINARIES.
4	1 EA.	POLE B: STEEL POLE WITH MOUNTING HEIGHT OF 8'. PELCO PB-5334-PNC, PB-5325-PNC, PB-5306-GLV. MEETS ITD STANDARD SPECIFICATION 713.08 FOR PEDESTRIAN SIGNAL POLES.
5	5 EA.	VEHICLE SIGNAL HEAD: EMPTY 12" DIAMETER SIGNAL HEAD, 3 SECTION. ECONOLITE STP38VDAB11N-11-11 W/ ECONOLITE 06-1001-011 VISOR AND ECONOLITE 5" REFLECTIVE BACKPLATE. REFERENCE ITD STANDARD SPECIFICATION 713.11 FOR VEHICLE SIGNAL HEADS.
6	2 EA.	SIGNAL BRACKETS: TRAFFIC SIGNAL ONE-WAY CLAMP MOUNT FOR MAST ARM MOUNTING. PELCO AS-0125-3-96-SS. (SIGNAL HEAD NO. E1 & E2)
7	3 EA.	SIGNAL BRACKETS: TRAFFIC SIGNAL ONE-WAY FOR SIDE OF POST TERMINAL COMPARTMENT MOUNTING FOR 12" THREE SECTION TRAFFIC SIGNAL. ECONOLITE FWA2102BG. (SIGNAL HEAD NO. E3, E4, & E5)
8	5 EA.	VEHICLE SIGNAL LAMPS (RED BALL): 12" LED 120V, DAILIGHT 433-1210-003XL15. SEE ITD STANDARD SPECIFICATION 713.11 FOR SIGNAL HEADS AND 713.12 FOR SIGNAL HEAD COVERS.
9	8 EA.	VEHICLE SIGNAL LAMPS (YELLOW BALL): 12" LED 120V, DAILIGHT 433-3230-901XL15.
10	1 EA.	VEHICLE SIGNAL LAMPS (YELLOW BALL): 8" LED 120V, DAILIGHT 433-3130-901XL.
10	1 EA.	VEHICLE SIGNAL LAMPS (GREEN BALL): 12" LED 120V, DAILIGHT 433-2270-001XL15.
11	1 EA.	FOUNDATION: TYPE "A" FOUNDATION FOR SIGNAL POLE "B". REFERENCE ITD STANDARD 713.10 BASE BREAKAWAY DEVICE AND 656.02 TRAFFIC SIGNAL INSTALLATION
12	1 EA.	FOUNDATION: TYPE "D" FOUNDATION FOR SIGNAL POLE "A". REFERENCE ITD STANDARD 713.10 BASE BREAKAWAY DEVICE AND 656.02 TRAFFIC SIGNAL INSTALLATION
13	3 EA.	JUNCTION BOX: SIZE C CONCRETE JUNCTION BOX. REFERENCE ITD STANDARD SPECIFICATIONS 713.05 CONCRETE JUNCTION BOXES
14	1 EA.	FIBER INTERCONNECT: PREPARE 400' OF FIBER CABLE TO CONNECT TO NORTHWEST JUNCTION BOX THROUGH MAIN CONTROL BOX INCLUDES CONDUIT, TRENCHING, AND BACKFILL AS INCIDENTALS.
15	1 EA.	MISCELLANEOUS HARDWARE: INCLUDES PLASTIC CONDUIT, WATERTIGHT STEEL ELBOWS, THWN WIRE, 600 VOLT 14 GAUGE 3C & 5C SIGNAL CABLE, AND VARIOUS ITEMS, HARDWAR, AND FITTINS NECESSARY FOR THE COMPLETE SIGNAL AND LIGHTING INSTALLATION AS SHOWN ON PLANS.

ITEM QTY. ITEM S656-015A – EMERGENCY SIGNAL INSTALLATION
CONTRACTOR SUPPLIED MATERIALS

REVISIONS	
DATE	DESCRIPTION

DESIGNED	WER	SCALES SHOWN ARE FOR 11" X 17" PRINTS ONLY
DESIGN CHECKED	GEH	
DETAILED	WER	CADD FILE NAME L18-05_26.dwg
DRAWING CHECKED	PAO	DRAWING DATE: FEBRUARY, 2020

IDAHO TRANSPORTATION DEPARTMENT

TD&H ENGINEERING

PROJECT NO.	EMERGENCY SIGNAL MATERIALS SUMMARY	English
TR036	BRYDEN AVENUE & 5TH STREET INTERSECTION	COUNTY NEZ PERCE KEY NUMBER XXXXX SHEET 26 OF 73

PROFESSIONAL ENGINEER LICENSED 7654 STATE OF IDAHO PHILLIP A. ODEGARD 02/28/2020

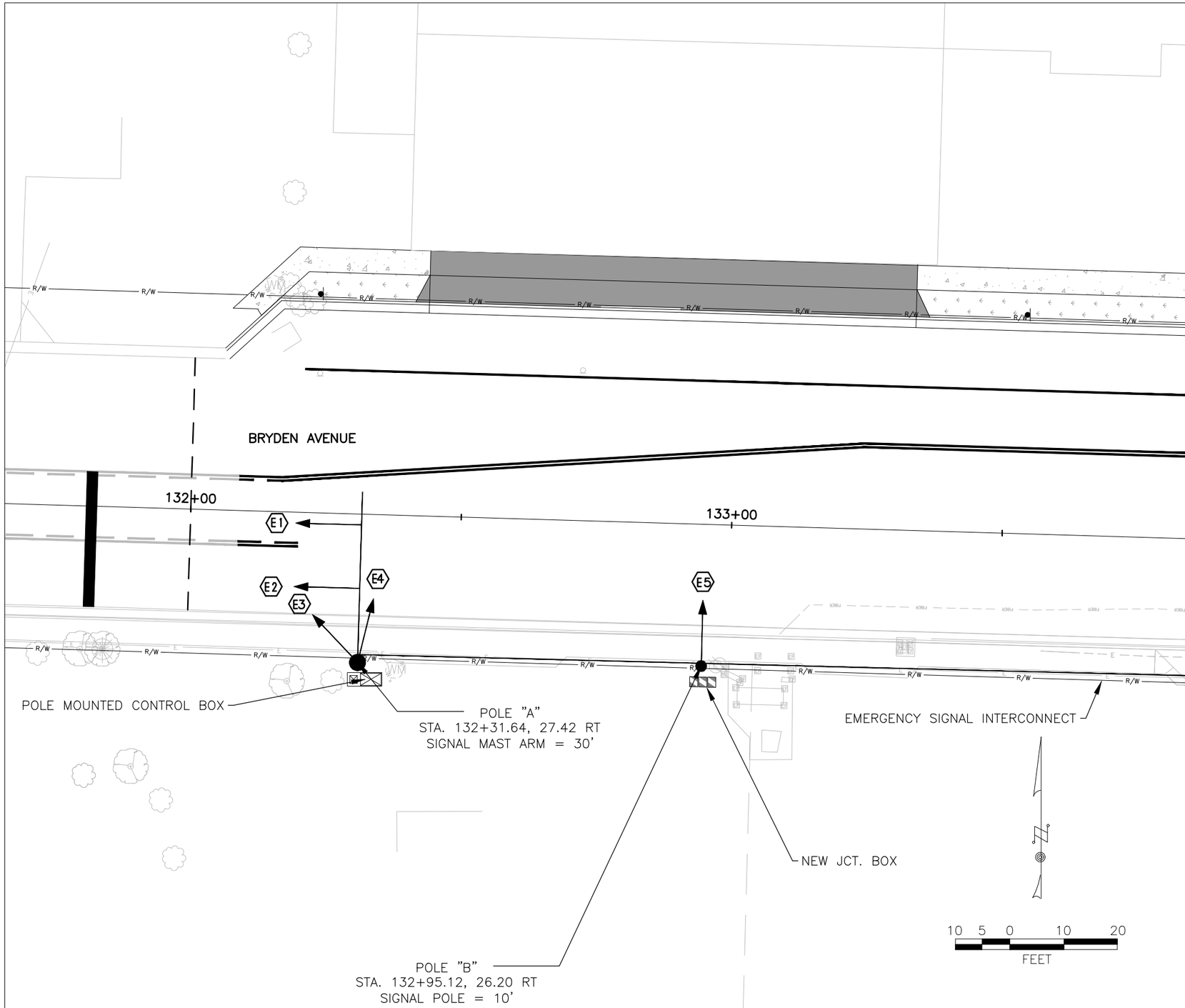

LEGEND

- JUNCTION BOX
- EXIST. JUNCTION BOX
- LUMINAIRE W/ARM
- SIGNAL HEAD (3 SECTION)
- SIGNAL HEAD (4 SECTION)
- PEDESTRIAN HEAD SIGNAL
- POLE W/MAST ARM
- VIDEO CAMERA
- PEDESTRIAN POLE
- PREEMPT DETECTOR/INDICATOR
- CONTROLLER & SERVICE PEDESTAL
- SIGNAL HEAD NUMBER.
- PEDESTRIAN HEAD NUMBER

LIGHTING SPECIFICATIONS

ILLUMINATION	LIGHT EMITTING DIODE (LED)
LUMINAIRES	200 WATT MAX.
INTENSITY	Eavg = 1.8 FC Eavg/Emin = 3.0 MAX.
DISTRIBUTION	TYPE III
CIRCUITRY	UNDERGROUND CONDUIT
SERVICE	PEDESTAL MOUNTED 120/240 VOLT
SUPPORT	GALVANIZED STEEL POLES AND STANDARD EXTENSIONS ON SIGNAL POLES

NOTES:

1. INSTALL ALL TRAFFIC CONTROL DEVICES IN CONFORMANCE WITH THE MANUAL ON UNIFORM TRAFFIC CONTROL DEVICES (MUTCD), AS ADOPTED BY THE STATE.
2. SEE "EMERGENCY SIGNAL DIAGRAM" FOR FURTHER SIGNAL INSTALLATION INSTRUCTION.
3. POTHOLE LOCATION OF PROPOSED POLE AND CABINET FOUNDATIONS PRIOR TO CONSTRUCTION AND PRIOR TO ORDERING SIGNAL EQUIPMENT. BRING ANY CONFLICTS IMMEDIATELY TO THE ATTENTION OF THE ENGINEER.
4. INSTALL TYPE D SIGNAL POLE FOUNDATION FOR POLE "A". USE TYPE A FOUNDATION FOR POLE "B".
5. VERIFY AND CHECK ALL DIMENSIONS AND DETAILS SHOWN ON THE DRAWINGS PRIOR TO THE START OF CONSTRUCTION. BRING ANY DISCREPANCIES IMMEDIATELY TO THE ATTENTION OF THE ENGINEER FOR CLARIFICATIONS.

PROFESSIONAL ENGINEER LICENSED 7654 02/28/2020 STATE OF IDAHO PHILLIP A. ODEGARD

REVISIONS	
DATE	DESCRIPTION

DESIGNED: WER
DESIGN CHECKED: GEH
DETAILED: WER
DRAWING APPROVED: PAO

SCALES SHOWN ARE FOR 11" X 17" PRINTS ONLY
CADD FILE NAME L18-051_27.dwg
DRAWING DATE: FEBRUARY, 2020

IDAHO TRANSPORTATION DEPARTMENT
TD&H ENGINEERING

PROJECT NO. TR036

EMERGENCY SIGNAL PLAN
BRYDEN AVENUE & 5TH STREET INTERSECTION
LEWISTON, IDAHO

English
COUNTY NEZ PERCE
KEY NUMBER XXXXX
SHEET 27 OF 73

SIGNAL SEQUENCE CHART

PHASE	VEHICLE HEADS E1	E2	E3	E4	E5	CLEARANCE
Φ1	NA	NA	NA	NA	NA	VEHICLE
	NA	NA	NA	NA	NA	
Φ2	FY	FY	FY	R	R	PEDESTRIAN
	FY	FY	FY	R	R	
	Y	Y	Y	R	R	
Φ3	NA	NA	NA	NA	NA	VEHICLE
	NA	NA	NA	NA	NA	
Φ4	R	R	R	G	G	PEDESTRIAN
	R	R	R	G	G	
	R	R	R	Y	Y	

PHASING DIAGRAM

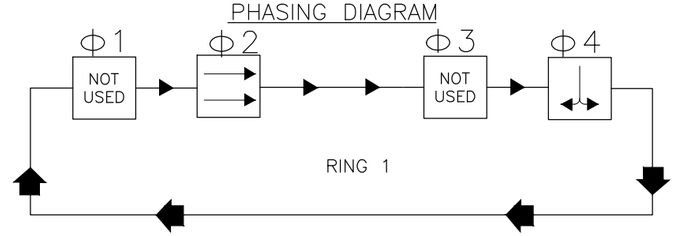

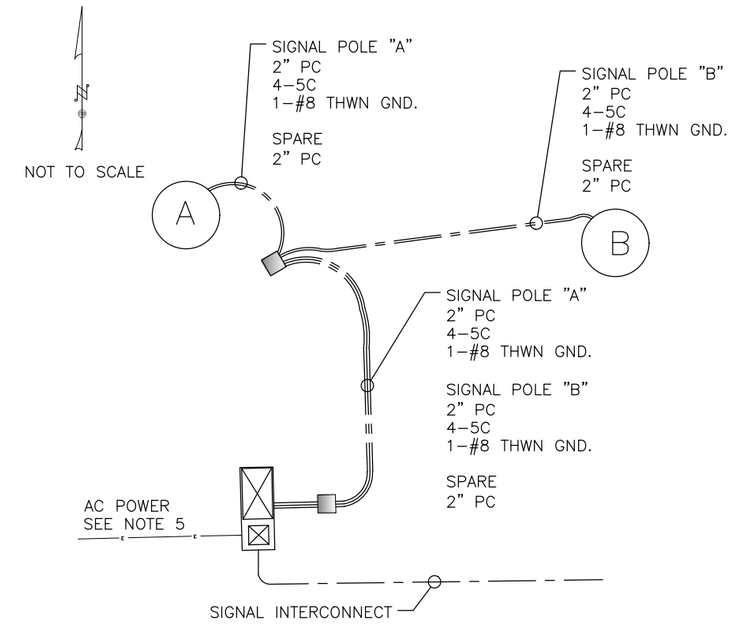

NOTES:

1. USE 2" PC FROM EACH SIGNAL "C" SIZE JUNCTION BOX TO EACH SIGNAL POLE BASE. THE FILL SHALL BE 2 CONDUCTOR CABLES FOR PHASES: TO BE IMSA 19-1 OR 20-1 TYPE CABLES. UNUSED CONDUCTORS SHALL BE RETAINED FULL LENGTH
2. NON-METALLIC RACEWAYS SHALL HAVE A # 8 THWN GROUND CONDUCTOR.
3. SEE EMERGENCY SIGNAL PLAN SHEET FOR LOCATION OF JUNCTION BOXES.
4. USE OF SIGNAL CONDUIT TO RUN SIGNAL INTERCONNECT BETWEEN EMERGENCY SIGNAL AND BRYDEN AVENUE/5TH STREET INTERSECTION IF POSSIBLE.
5. CONTROL CABINET POWER SHALL BE DIRECTLY FROM OVERHEAD POWER, WITH METER INSTALLED WITH CABINET
6. FLASHING YELLOW HEADS SHALL BE 8" LIGHTS, SEE SHEET 26

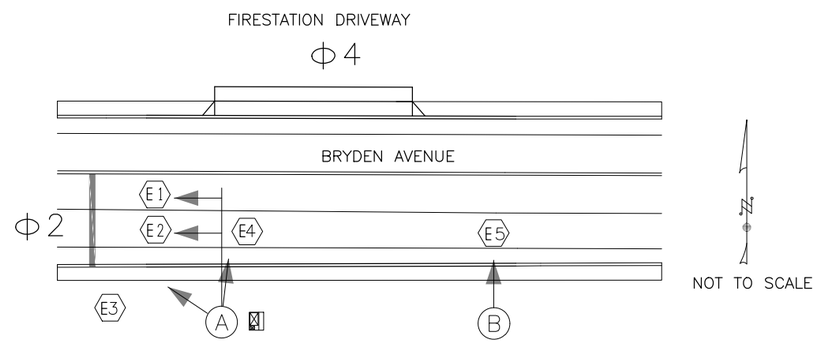

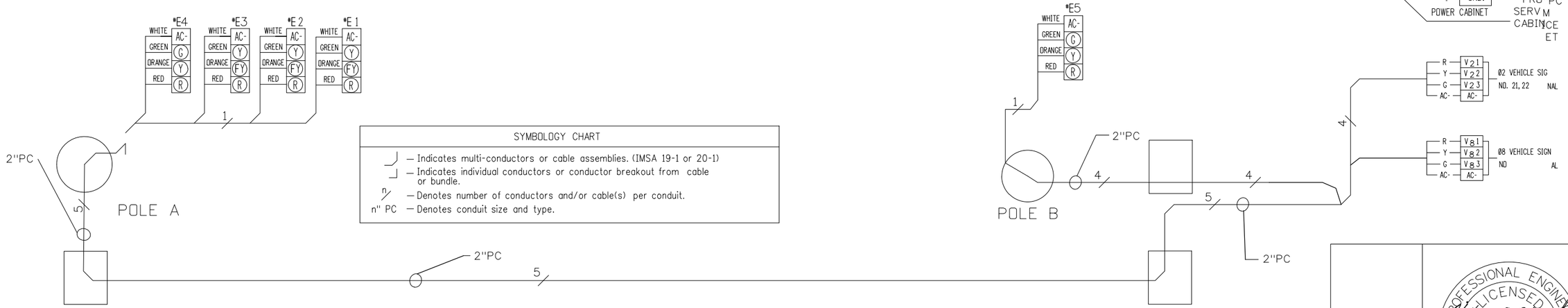

SYMBOLOGY CHART

	— Indicates multi-conductors or cable assemblies. (IMSA 19-1 or 20-1)
	— Indicates individual conductors or conductor breakout from cable or bundle.
n	— Denotes number of conductors and/or cable(s) per conduit.
n" PC	— Denotes conduit size and type.

REVISIONS	
DATE	DESCRIPTION

DESIGNED: WER
DESIGN CHECKED: GEH
DETAILED: WER
DRAWING APPROVED: PAO

SCALES SHOWN ARE FOR 11" X 17" PRINTS ONLY

CADD FILE NAME L18-051_28.dwg

DRAWING DATE: FEBRUARY, 2020

IDAHO TRANSPORTATION DEPARTMENT

TD&H ENGINEERING

PROJECT NO. TR036

EMERGENCY SIGNAL DIAGRAM

BRYDEN AVENUE & 5TH STREET INTERSECTION LEWISTON, IDAHO

English

COUNTY NEZ PERCE

KEY NUMBER XXXXX

SHEET 28 OF 73

PROFESSIONAL ENGINEER LICENSED 7654 02/28/2020 STATE OF IDAHO PHILLIP A. ODEGARD

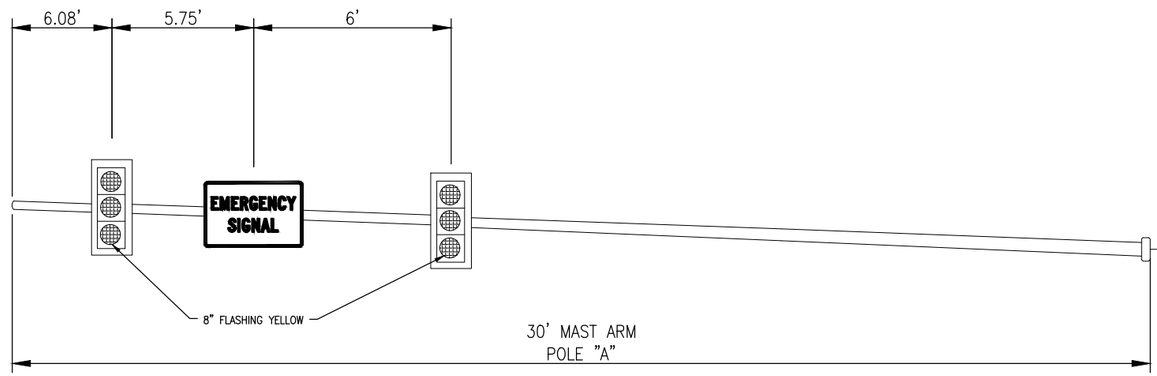

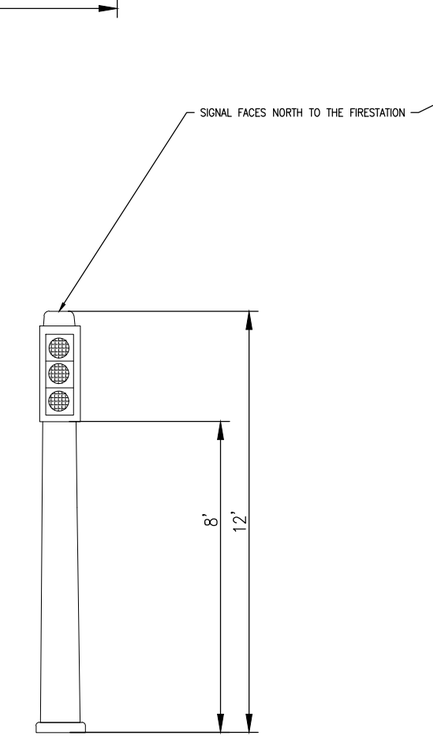

EMERGENCY SIGNAL POLE "B"

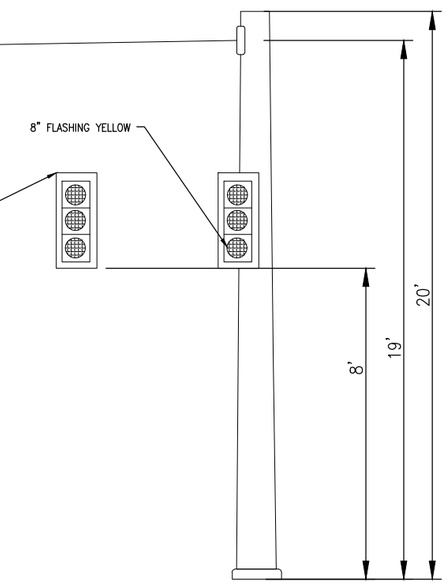

EMERGENCY SIGNAL POLE "A"

NOTES:

1. ALL SIGNING AND MOUNTING BRACKETS SHOWN ON THIS SHEET SHALL BE CONSIDERED INCIDENTAL TO ITEM SXXX-XXXX EMERGENCY SIGNAL INSTALLATION.
2. SEE "STANDARD DETAIL 656-1, TD-14A, AND TD-14B" FOR MAST ARM INSTALLATION DETAILS.
3. SIGNAL HEADS ARE TO BE 12" DIAMETER ON ALL EMERGENCY SIGNAL FACES

REVISIONS	
DATE	DESCRIPTION

DESIGNED: WER	SCALES SHOWN ARE FOR 11" X 17" PRINTS ONLY	IDAHO TRANSPORTATION DEPARTMENT
DESIGN CHECKED: GEH		
DETAILED: WER	CADD FILE NAME L18-051_29.dwg	
DRAWING APPROVED: PAO	DRAWING DATE: FEBRUARY, 2020	TD&H ENGINEERING

PROJECT NO.: TR036

EMERGENCY SIGNAL MOUNTING DIAGRAM

BRYDEN AVENUE & 5TH STREET INTERSECTION
LEWISTON, IDAHO

English

COUNTY: NEZ PERCE

KEY NUMBER: XXXXX

SHEET 29 OF 73

PROFESSIONAL ENGINEER LICENSED 7654 02/28/2020 STATE OF IDAHO PHILLIP A. ODEGARD

SIGN ASSEMBLY NO.	STATION (X) ALIGNMENT B = BRYDEN AVENUE F = 5TH STREET	RAMP NO.	FOUNDATION SIZE	POST TYPE	NO. OF POSTS	POST SPACING	APPROX. LENGTH OF 1st POST	APPROX. LENGTH OF 2nd POST	POST LENGTH ABOVE FINISH SHOULDER.	C	E	SIGN TYPE	SIGN DETAIL NUMBERS	SIGN SIZE W" x H"	APPROX. SQ. FT. OF SIGN	SIGN BACKGROUND COLOR	SIGN BRACKETS & BRACE ANGLES WEIGHT (LBS)	BRACKET NO.	REMARKS
1	129+50.00 RT (B)	--	8x8x36"	E-2	1	--	12'-0"	--	11'-0"	8'-6"		B	W11-8	30" x 30"	6.3	YELLOW	---	---	FIRETRUCK SYMBOL
2	129+50.00 RT (B)	--	8x8x36"	E-1	1	--		--			6'-0"	B	W11-12P	36" x 30"	7.5	YELLOW	---	---	EMERGENCY SIGNAL AHEAD
3	132+22.85 LT (B)	--	8x8x36"	E-2	1	--	11'-0"	--	10'-0"	3'-6"		B	R3-9B	24" x 36"	5.0	WHITE	---	---	CENTER LANE LEFT TURN ONLY
4	132+22.85 LT (B)	--			1	--		--			6'-0"	B	R3-9CP	30" x 12"	2.5	WHITE	---	---	BEGIN PLAQUE
5	133+53.55 LT (B)	--	8x8x36"	E-1	1	--	10'-6"	--	9'-6"	3'-0"	7'-0"	B	R10-7	24" x 30"	5.0	WHITE	---	---	DO NOT BLOCK INTERSECTION
6	133+92.87 LT (B)	--	8x8x36"	E-2	1	--	10'-3"	--	9'-3"	3'-0"		B	I-5	24" x 24"	4.0	GREEN	---	---	AIRPORT GUIDE SIGN
7	133+92.87 LT (B)	--				--		--			6'-0"	B	M5-1	21" X 15"	2.2	GREEN	---	---	GUIDE ARROW PLAQUE (LEFT)
8	134+44.62 LT (B)	--	8x8x36"	E-1	1	--	10'-6"	--	9'-6"	3'-0"	7'-0"	B	R2-1	24" x 30"	5.0	WHITE	---	---	SPEED LIMIT
9	134+96.74 RT (B)	--	8x8x36"	E-2	1	--	11'-6"	--	10'-6"	9'-3"	7'-0"	B	D3-2	54" X 42"	15.8	GREEN	---	---	HIGHWAY GUIDE SIGN
10	137+13.10 LT (B)	--				--		--			7'-0"	B	R3-7	30" x 30"	6.3	WHITE	---	---	RIGHT LANE MUST TURN RIGHT (USE EX. POLE)
11	137+92.30 LT (B)	--				--		--				B	R14-1	24" x 30"	5.0	WHITE	---	---	TRUCK ROUTE (USE EX. POLE)
12	137+92.30 LT (B)	--				--		--			6'-0"	B	M6-6	21" X 15"	2.2	WHITE	---	---	DIRECTIONAL ARROW PLAQUE
13	138+21.79 RT (B)	--		E-2		--		--				B	R3-9B	24" x 36"	5.0	WHITE	---	---	CENTER LANE LEFT TURN ONLY (USE EX. POLE)
14	138+21.79 RT (B)	--				--		--			6'-0"	B	R3-9CP	30" x 12"	2.5	WHITE	---	---	BEGIN PLAQUE
15	138+30.97 RT (B)	--	8x8x36"	E-1	1	--	10'-6"	--	9'-6"	3'-0"	7'-0"	B	R2-1	24" x 30"	5.0	WHITE	---	---	SPEED LIMIT
16	138+56.07 LT (B)	--				--		--			7'-0"	B	R1-1	30" x 30"	6.3	RED	---	---	STOP SIGN (USE EX. POLE)
17	138+98.24 LT (B)	--				--		--				B	R3-9B	24" x 36"	6.0	WHITE	---	---	CENTER LANE LEFT TURN ONLY (USE EX. POLE)
18	138+98.24 LT (B)	--				--		--			6'-0"	B	R3-9DP	30" x 12"	2.5	WHITE	---	---	END PLAQUE
19	29+48.01 LT (F)	--				--		--			7'-0"	B	R1-1	30" x 30"	6.3	RED	---	---	STOP SIGN (USE EX. POLE)
20	29+69.38 RT (F)	--	8x8x36"	E-1	1	--	10'-6"	--	9'-6"	3'-6"	7'-0"	B	R1-1	30" x 30"	6.3	RED	---	---	STOP SIGN
21	34+30.26 LT (F)	--	8x8x36"	E-2	1	--	10'-9"	--	9'-9"	3'-0"		B	R14-1	24" x 30"	5.0	WHITE	---	---	TRUCK ROUTE
22	34+30.26 LT (F)	--				--		--			6'-0"	B	M6-4	21" X 15"	2.2	WHITE	---	---	DIRECTIONAL ARROW PLAQUE
23	34+38.37 RT (F)	--	8x8x36"	E-1	1	--	10'-6"	--	9'-6"	3'-0"	7'-0"	B	R2-1	24" x 30"	5.0	WHITE	---	---	SPEED LIMIT
24	34+42.33 LT (F)	--	8x8x36"	E-1	1	--	10'-6"	--	9'-6"	3'-6"	7'-0"	B	R3-7	30" x 30"	6.3	WHITE	---	---	RIGHT LANE MUST TURN RIGHT
25	34+79.68 LT (F)	--	8x8x36"	E-2	1	--	10'-3"	--	9'-3"	3'-0"		B	I-5	24" x 24"	4.0	GREEN	---	---	AIRPORT GUIDE SIGN
26	34+79.68 LT (F)	--				--		--			6'-0"	B	M5-1	21" X 15"	2.2	GREEN	---	---	GUIDE ARROW PLAQUE (RIGHT)
27	34+79.68 LT (F)	--	8x8x36"	E-2	1	--		--				B	RS-128	24" x 24"	4.0	GREEN	---	---	GOLF COURSE GUIDE SIGN (MOUNT W/ AIRPORT GUIDE)
28	34+79.68 LT (F)	--				--		--			6'-0"	B	M5-1	21" X 15"	2.2	GREEN	---	---	GUIDE ARROW PLAQUE (RIGHT)
29	35+51.67 RT (F)	--				--		--				B	R3-9B	24" x 36"	5.0	WHITE	---	---	CENTER LANE LEFT TURN ONLY (USE EX. POLE)
30	35+51.67 RT (F)	--				--		--			6'-0"	B	R3-9CP	30" x 12"	2.5	WHITE	---	---	BEGIN PLAQUE
31	35+72.46 LT (F)	--				--		--				B	R3-9B	24" x 36"	6.0	WHITE	---	---	CENTER LANE LEFT TURN ONLY (USE EX. POLE)
32	35+72.46 LT (F)	--				--		--			6'-0"	B	R3-9DP	30" x 12"	2.5	WHITE	---	---	END PLAQUE
															139.8				

NOTE: MUTCD SIGN NUMBERS ARE BEING SPECIFIED.
ITD SIGN NUMBERS ARE NOT BEING USED.

COLUMN C, DISTANCE FROM SHOULDER TO CENTER LINE OF FIRST POST

COLUMN E, BOTTOM OF MAJOR SIGN ABOVE FINISHED SHOULDER

POST LENGTHS SHOWN ARE APPROXIMATE. FINAL VALUES SHALL BE DETERMINED IN THE FIELD PRIOR TO FABRICATION

PROFESSIONAL ENGINEER LICENSED 7654 02/28/2020 STATE OF IDAHO PHILLIP A. ODEGARD

REVISIONS	
DATE	DESCRIPTION

DESIGNED	WER	SCALES SHOWN ARE FOR 11" X 17" PRINTS ONLY	
DESIGN CHECKED	GEH		
DETAILED	WER	CADD FILE NAME L18-051_30.dwg	
DRAWING CHECKED	PAO	DRAWING DATE: FEBRUARY, 2020	

IDAHO TRANSPORTATION DEPARTMENT

TD&H ENGINEERING

PROJECT NO. TR036

SIGNING ERECTION SPECIFICATIONS

BRYDEN AVENUE & 5TH STREET INTERSECTION

English

COUNTY NEZ PERCE

KEY NUMBER XXXXX

SHEET 30 OF 73

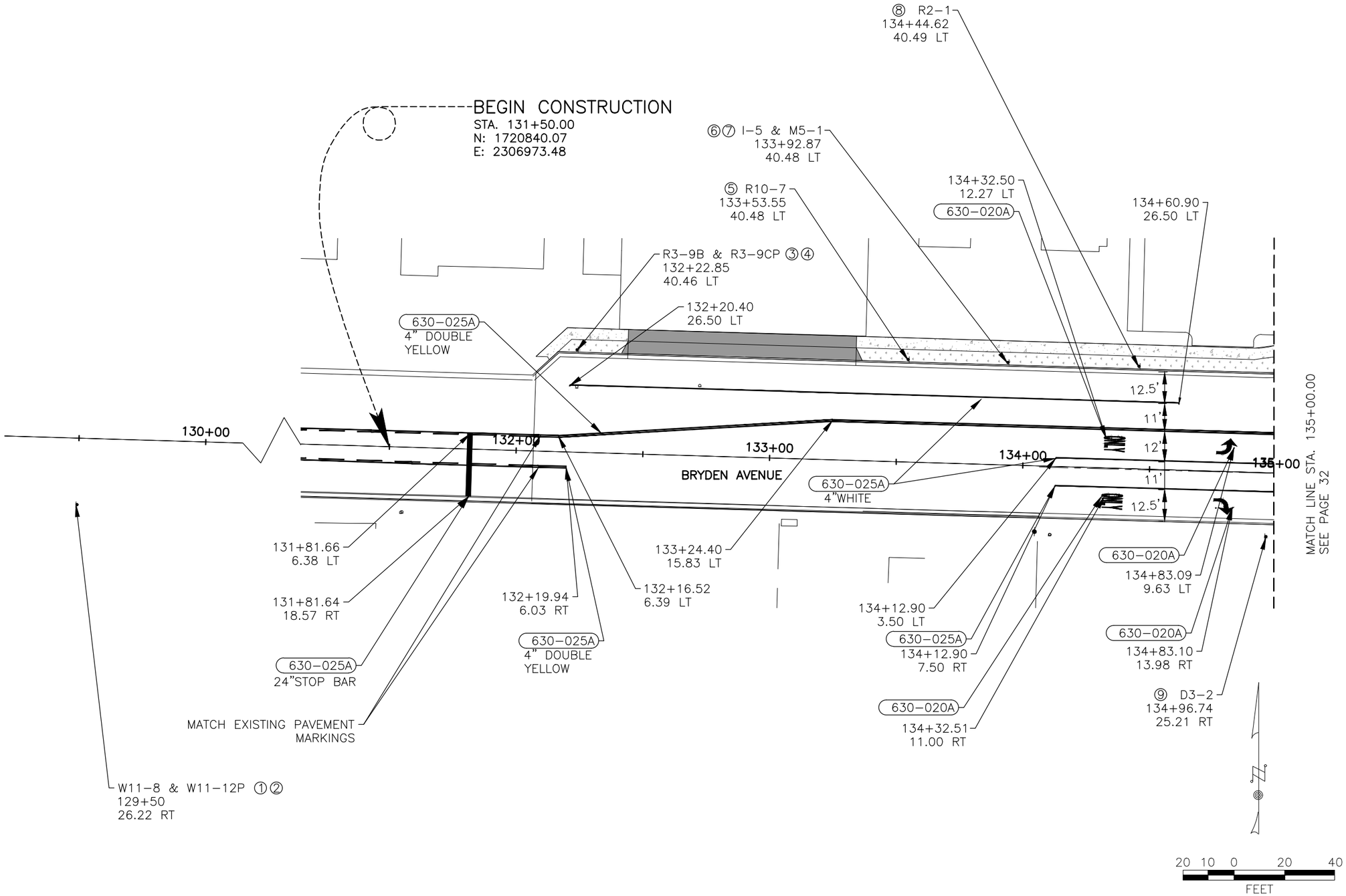

630-020A PAVEMENT MARKING (WATERBORN)
75 S.F.
STA. 132+00.00 – 135+00.00
WORD STA. 134+12.90 RT
WORD STA. 134+32.50 LT
MARKING STA.134+63.09 LT
MARKING STA. 134+83.10 RT

630-025A PAVEMENT MARKING (WATERBORN)
1065 L.F.
STA. 132+00.00 – 135+00.00

R3-9B
24" X 36"

R3-9CP
30" X 12"


I-5
24" X 24"


M5-1
21" X 15"

D3-2
54" X 42"

R2-1
24" X 30"

R10-7
24" X 30"


W11-8
30" X 30"

W11-12P
36" X 30"

NOTES:

1. MATCH EXISTING PAINT MARKINGS
2. SALVAGE EXISTING SIGNS TO CITY OF LEWISTON
3. ITEMS ASSOCIATED WITH THE PROPOSED EMERGENCY SIGNAL ARE DEPENDANT ON STATION CONSTRUCTION.

PROFESSIONAL ENGINEER
LICENSED
7654
02/28/2020
STATE OF IDAHO
PHILLIP A. ODEGARD

REVISIONS	DESIGNED: WER	SCALES SHOWN ARE FOR 11" X 17" PRINTS ONLY	IDAHO TRANSPORTATION DEPARTMENT	PROJECT NO.	STRIPING & SIGNING (1 OF 4)	English
DESCRIPTION	DESIGN CHECKED: GEH			TR036	BRYDEN AVENUE & 5TH STREET INTERSECTION LEWISTON, IDAHO	COUNTY NEZ PERCE
	DETAILED: WER	CADD FILE NAME L18-051_31.dwg				KEY NUMBER XXXXX
	DRAWING APPROVED: PAO	DRAWING DATE: FEBRUARY, 2020	TD&H ENGINEERING			SHEET 31 OF 73

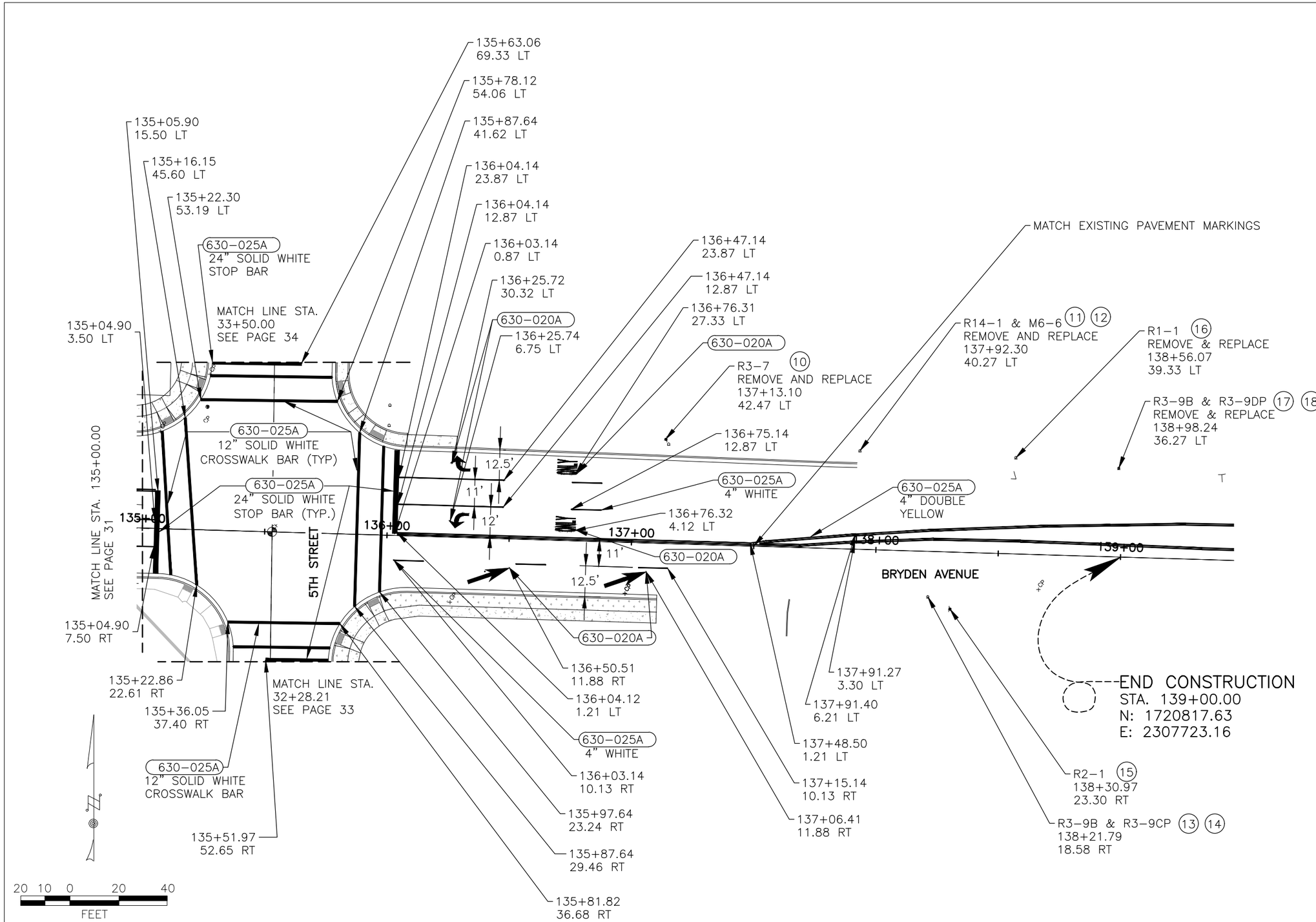

630-020A PAVEMENT MARKING (WATERBORN)
205 S.F.
STA. 135+00.00 – 139+00.00
MARKING STA. 136+25.72 LT
MARKING STA. 136+25.74 LT
MARKING STA. 136+50.51 RT
WORD STA. 136+76.31 LT
WORD STA. 136+76.32 LT
MARKING STA. 137+06.41 RT

630-025A PAVEMENT MARKING (WATERBORN)
1180 L.F.
STA. 135+00.00 – 139+00.00

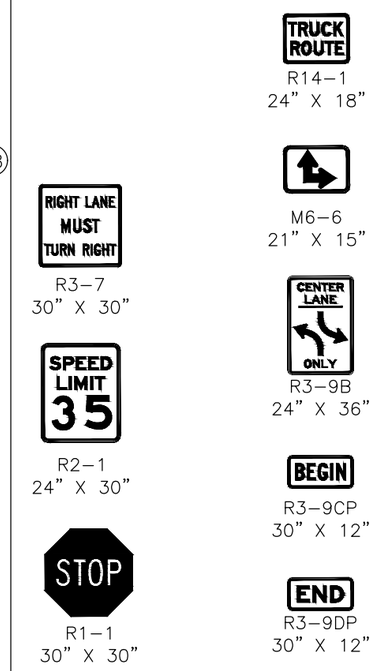

NOTES:

1. MATCH EXISTING PAINT MARKINGS.
2. SALVAGE EXISTING SIGNS TO CITY OF LEWISTON.

REVISIONS	DESIGNED: WER	SCALES SHOWN ARE FOR 11" X 17" PRINTS ONLY	IDAHO TRANSPORTATION DEPARTMENT	PROJECT NO.	STRIPING & SIGNING (2 OF 4)	English
DESCRIPTION	DESIGN CHECKED: GEH			TR036	BRYDEN AVENUE & 5TH STREET INTERSECTION LEWISTON, IDAHO	COUNTY NEZ PERCE
	DETAILED: WER	CADD FILE NAME L18-051_32.dwg	TD&H ENGINEERING			KEY NUMBER XXXXX
	DRAWING APPROVED: PAO	DRAWING DATE: FEBRUARY, 2020				SHEET 32 OF 73

PROFESSIONAL ENGINEER LICENSED 7654 02/28/2020 STATE OF IDAHO PHILLIP A. ODEGARD

630–020A PAVEMENT MARKING (WATERBORN)
40 S.F. STA. 29+65.00 – 32+28.21
WORD STA. 31+54.82 RT
MARKING STA. 32+05.39

630–025A PAVEMENT MARKING (WATERBORN)
620 L.F. STA. 29+65.00 – 32+28.21

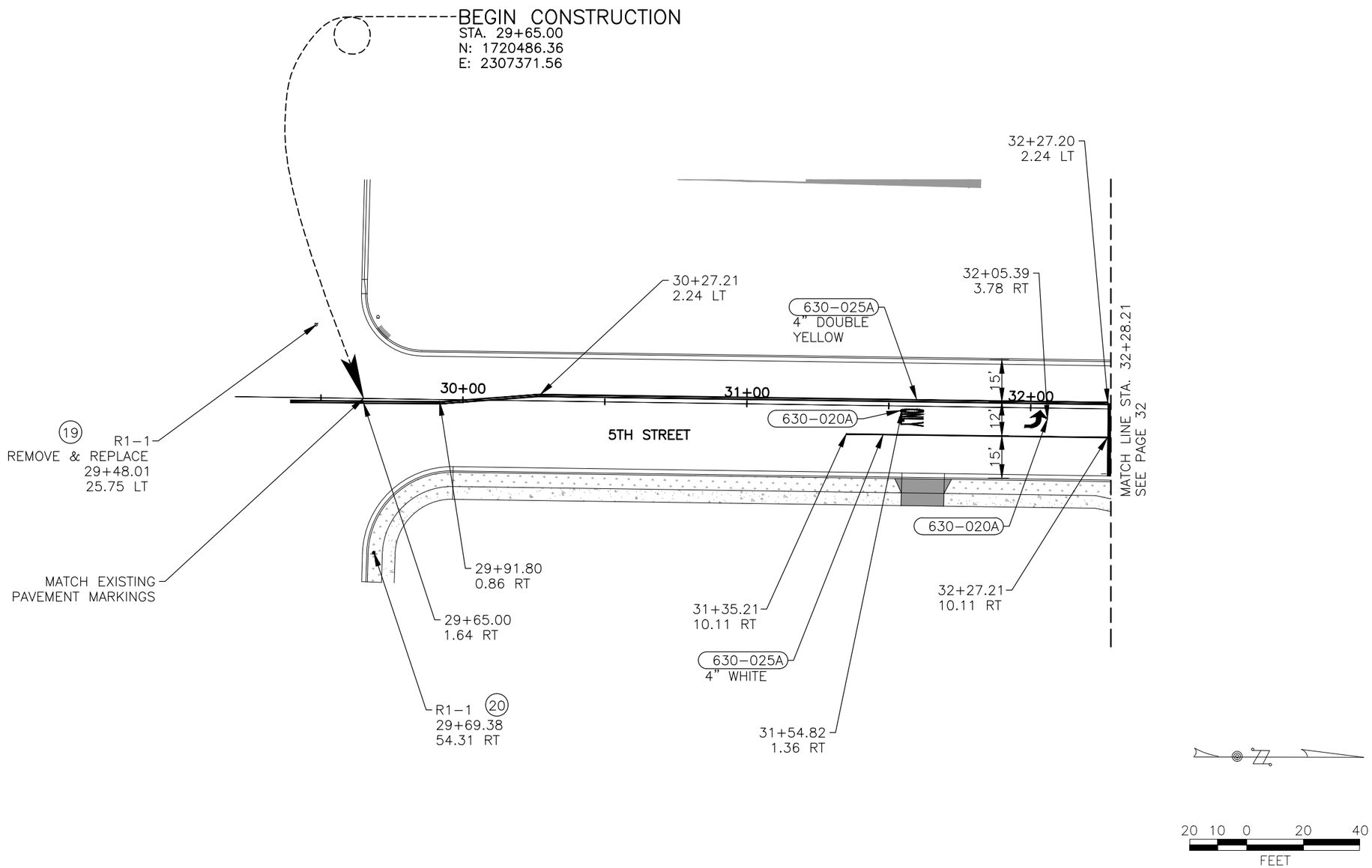

R1–1
30" X 30"

NOTES:

1. MATCH EXISTING PAINT MARKINGS.
2. SALVAGE EXISTING SIGNS TO CITY OF LEWISTON.

REVISIONS	DESIGNED: WER	SCALES SHOWN ARE FOR 11" X 17" PRINTS ONLY	IDAHO TRANSPORTATION DEPARTMENT	PROJECT NO.	STRIPING & SIGNING (3 OF 4)	English
DESCRIPTION	DESIGN CHECKED: GEH			TR036	BRYDEN AVENUE & 5TH STREET INTERSECTION LEWISTON, IDAHO	COUNTY NEZ PERCE
	DETAILED: WER	CADD FILE NAME L18–051_33.dwg	TD&H ENGINEERING			KEY NUMBER XXXXX
	DRAWING APPROVED: PAO	DRAWING DATE: FEBRUARY, 2020				SHEET 33 OF 73

PROFESSIONAL ENGINEER LICENSED 7654 02/28/2020 STATE OF IDAHO PHILLIP A. ODEGARD

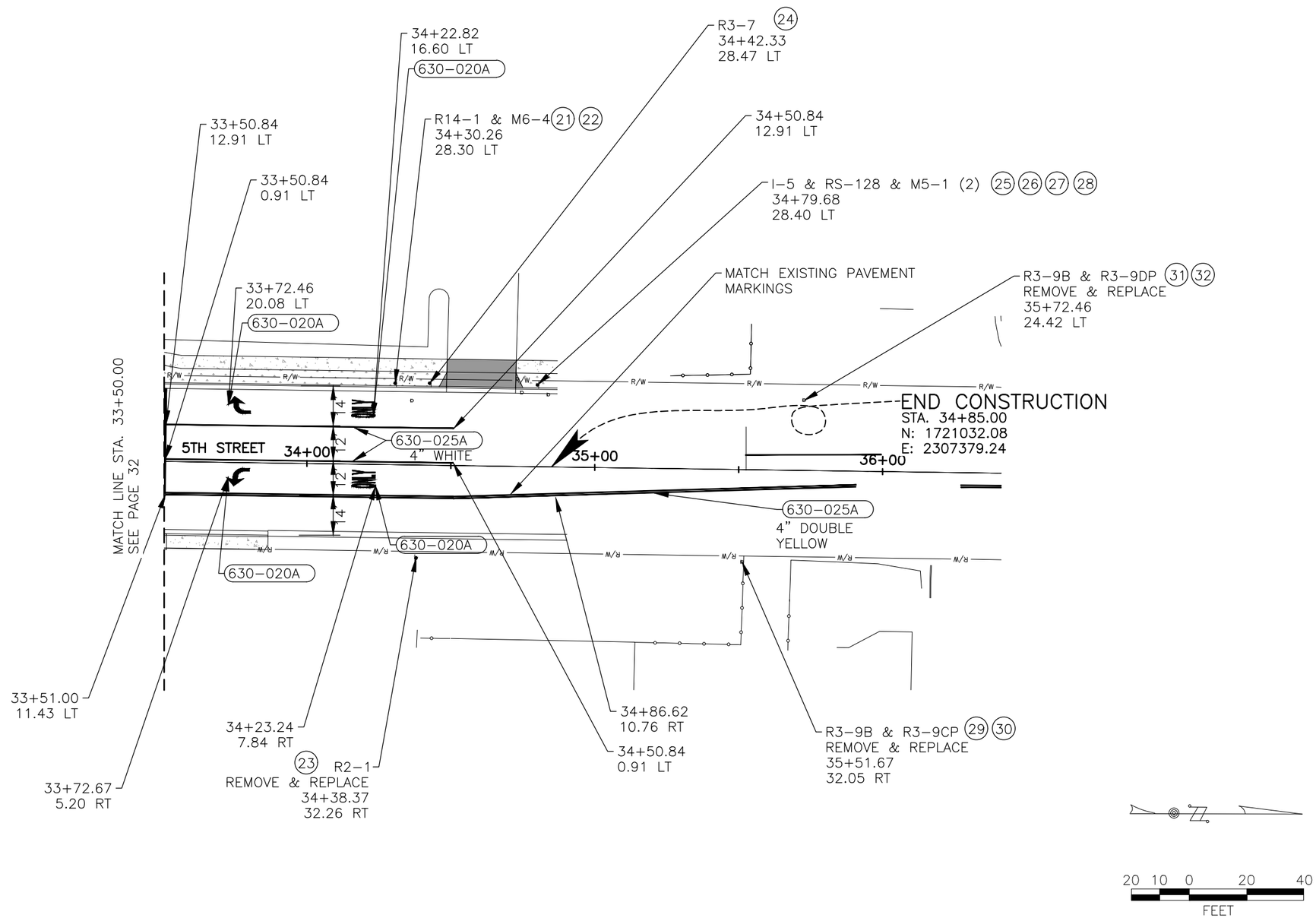

630-020A PAVEMENT MARKING (WATERBORN)
75 S.F. STA. 33+50.00 TO 34+85.00
MARKING STA. 33+72.46 LT
MARKING STA. 33+72.67 RT
WORD STA. 34+22.82 LT
WORD STA. 34+23.24 RT

630-025A PAVEMENT MARKING (WATERBORN)
680 L.F. STA. 33+50.00 TO 34+85.00

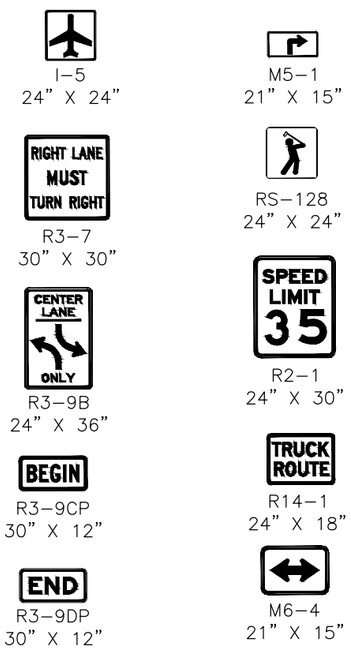

NOTES:

1. MATCH EXISTING PAINT MARKINGS.
2. SALVAGE EXISTING SIGNS TO CITY OF LEWISTON.

REVISIONS	DESIGNED: WER	SCALES SHOWN ARE FOR 11" X 17" PRINTS ONLY	IDAHO TRANSPORTATION DEPARTMENT	PROJECT NO.	STRIPING & SIGNING (4 OF 4)	English
DESCRIPTION	DESIGN CHECKED: GEH			TR036	BRYDEN AVENUE & 5TH STREET INTERSECTION LEWISTON, IDAHO	COUNTY NEZ PERCE
	DETAILED: WER	CADD FILE NAME L18-051_34.dwg	TD&H ENGINEERING			KEY NUMBER XXXXX
	DRAWING APPROVED: PAO	DRAWING DATE: FEBRUARY, 2020				SHEET 34 OF 73

PROFESSIONAL ENGINEER LICENSED 7654 02/28/2020 STATE OF IDAHO PHILLIP A. ODEGARD

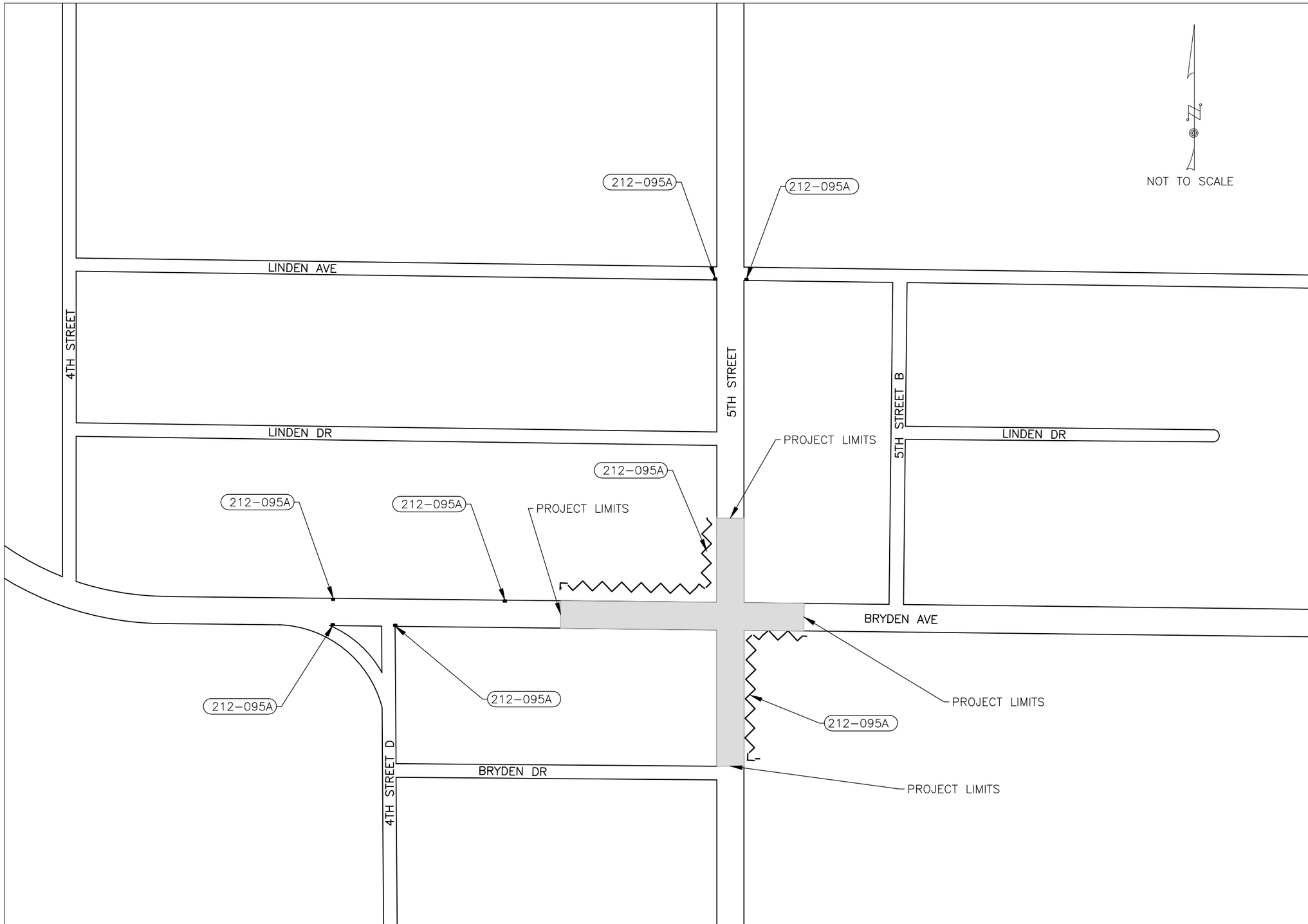

212-020A SILT FENCE
825 LF

212-095A INLET PROTECTION
6 EA

NOTES:

1. DUST CONTROL & SWEEPING SHALL BE INCIDENTAL

REVISIONS						
DATE	DESCRIPTION	DESIGNED: WER	SCALES SHOWN ARE FOR 11" X 17" PRINTS ONLY	IDAHO TRANSPORTATION DEPARTMENT	PROJECT NO.	INLET PROTECTION PLAN
		DESIGN CHECKED: GEH			TR036	BRYDEN AVENUE & 5TH STREET INTERSECTION LEWISTON, IDAHO
		DETAILED: WER	CADD FILE NAME L18-051_35.dwg			
		DRAWING APPROVED: PAO	DRAWING DATE: FEBRUARY, 2020	TD&H ENGINEERING		

English
COUNTY NEZ PERCE
KEY NUMBER XXXXX
SHEET 35 OF 73

PROFESSIONAL ENGINEER LICENSED 7654 02/28/2020 STATE OF IDAHO PHILLIP A. ODEGARD

DRYWELL DETAIL

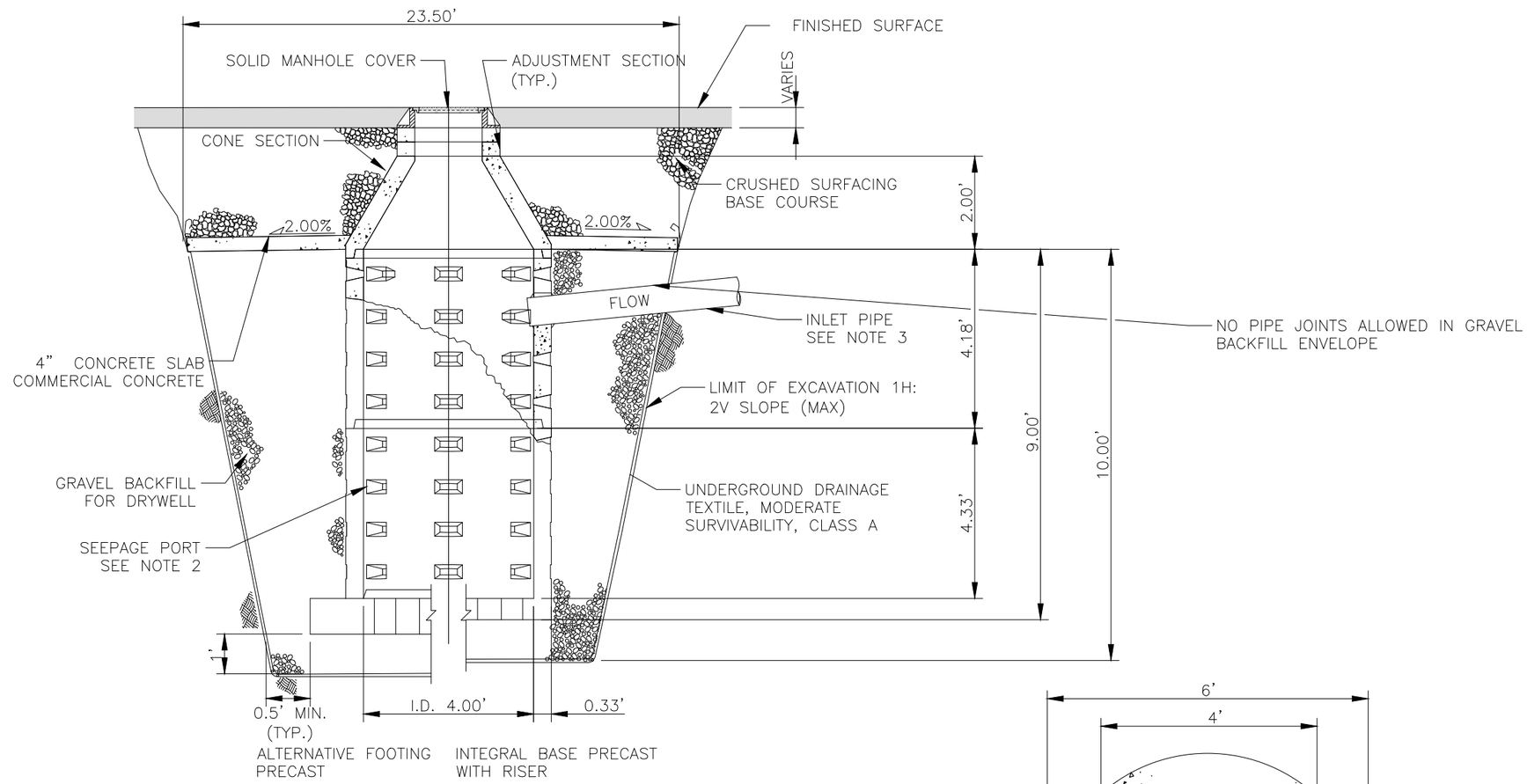

CUTAWAY ELEVATION VIEW

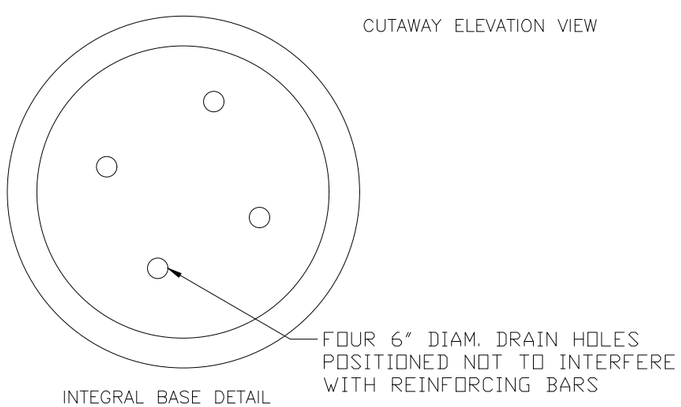

INTEGRAL BASE DETAIL

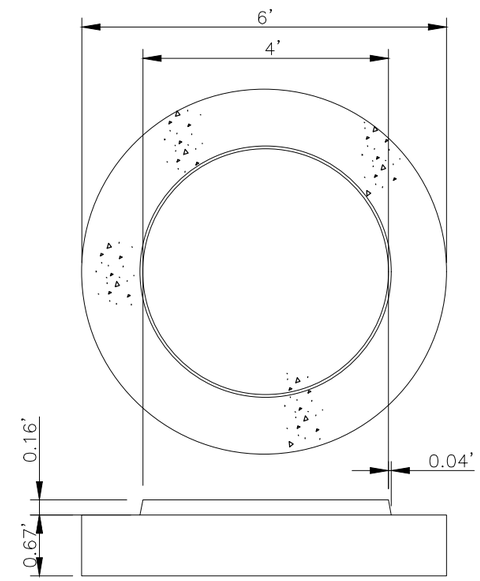

ALTERNATIVE PRECAST FOOTING DETAIL

NOTES:

1. PRECASE CONCRETE CONE SECTIONS MAY BE ECCENTRIC OR CONCENTRIC
2. SEEPAGE PORT ORIENTATION VARIES AMON MANUFACTURES
3. CONNECT INLET PIPE TO STRUCTURE USING PRECAS HOLE OR CORE DRILLED HOLE
4. FOR DEPTHS OVER 16.16' USE 72" X 8" ALTERNATIVE PRECAST FOOTING
5. WHEN NECESSARY, KNOCKOUTS ON PRECAST CONE, DRYWELL BASE, AND RISER SECTIONS SHALL HAVE A WALL THICKNESS OF $1\frac{1}{2}$" MIN. AND 2" MIN.

REVISIONS	
DATE	DESCRIPTION

DESIGNED: WER
DESIGN CHECKED: GEH
DETAILED: WER
DRAWING APPROVED: PAO

SCALES SHOWN ARE FOR 11" X 17" PRINTS ONLY
CADD FILE NAME L18-051_36.dwg
DRAWING DATE: FEBRUARY, 2020

IDAHO TRANSPORTATION DEPARTMENT
TD&H ENGINEERING

PROJECT NO. TR036

DRYWELL DETAIL
BRYDEN AVENUE & 5TH STREET INTERSECTION
LEWISTON, IDAHO

English
COUNTY NEZ PERCE
KEY NUMBER XXXXX
SHEET 36 OF 73

PROFESSIONAL ENGINEER LICENSED 7654 02/28/2020 STATE OF IDAHO PHILLIP A. ODEGARD

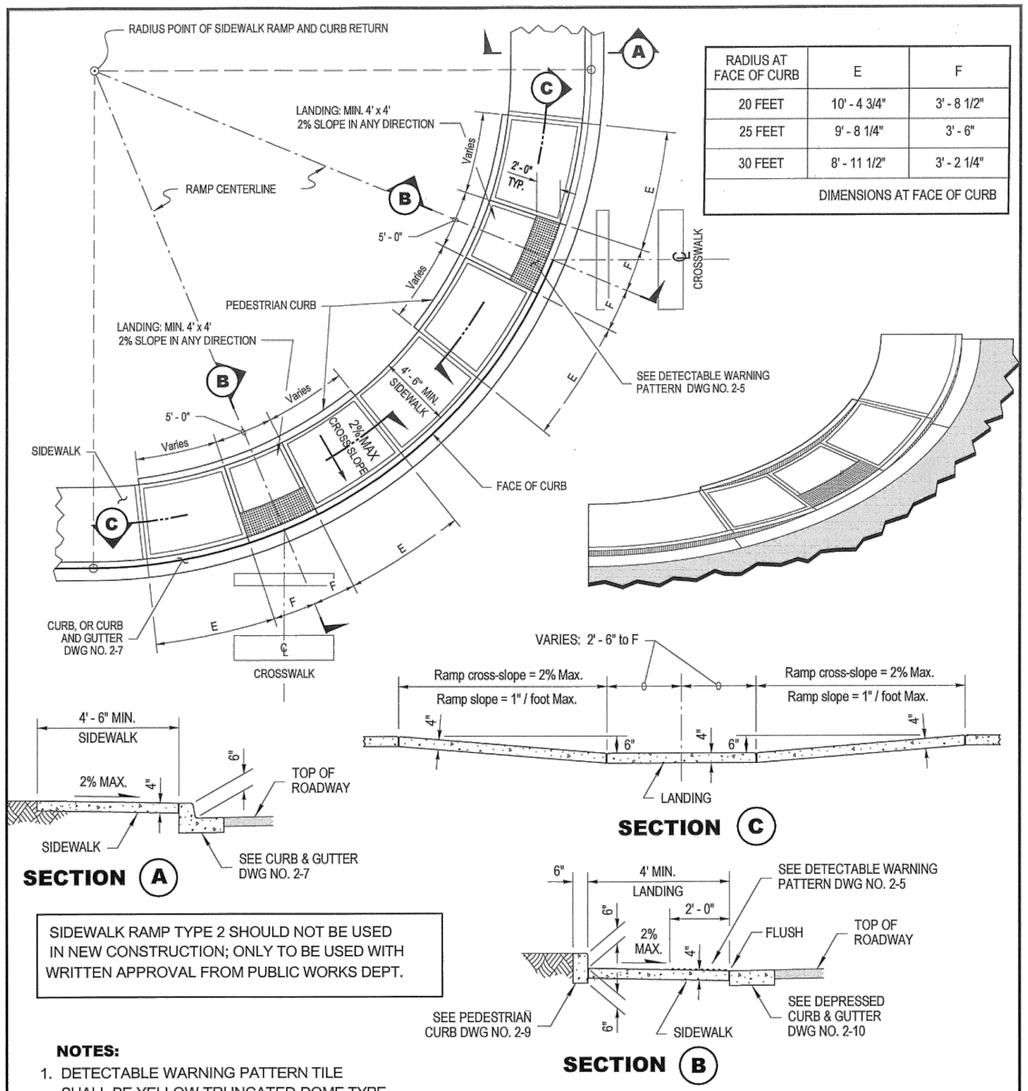

RADIUS AT FACE OF CURB	E	F
20 FEET	10' - 4 3/4"	3' - 8 1/2"
25 FEET	9' - 8 1/4"	3' - 6"
30 FEET	8' - 11 1/2"	3' - 2 1/4"
DIMENSIONS AT FACE OF CURB		

SIDEWALK RAMP TYPE 2 SHOULD NOT BE USED IN NEW CONSTRUCTION; ONLY TO BE USED WITH WRITTEN APPROVAL FROM PUBLIC WORKS DEPT.

NOTES:

1. DETECTABLE WARNING PATTERN TILE SHALL BE YELLOW TRUNCATED-DOME TYPE.
2. RAMP SLOPES SHALL NOT BE STEEPER THAN 12H:1V.
3. A 4' x 4' LANDING AT THE BOTTOM OF THE RAMP WITH 2% SLOPE IN ALL DIRECTIONS.
4. PLACEMENT OF DRAINAGE STRUCTURES, JUNCTION BOXES OR OTHER OBSTRUCTIONS WITHIN/ OR FRONT OF RAMP OR LANDING IS PROHIBITED.
5. THIS RAMP SHALL BE USED WITH HIGH BACK AND ROLLED CURB.

...\2-Concrete\Ramp Type 2.dwg

CITY OF LEWISTON, IDAHO
PUBLIC WORKS DEPARTMENT

SINGLE OR DOUBLE SIDEWALK RAMP TYPE 2

APPROVED FOR PUBLICATION
City Engineer — Date 3/9/17

DWG. NO. 2-12

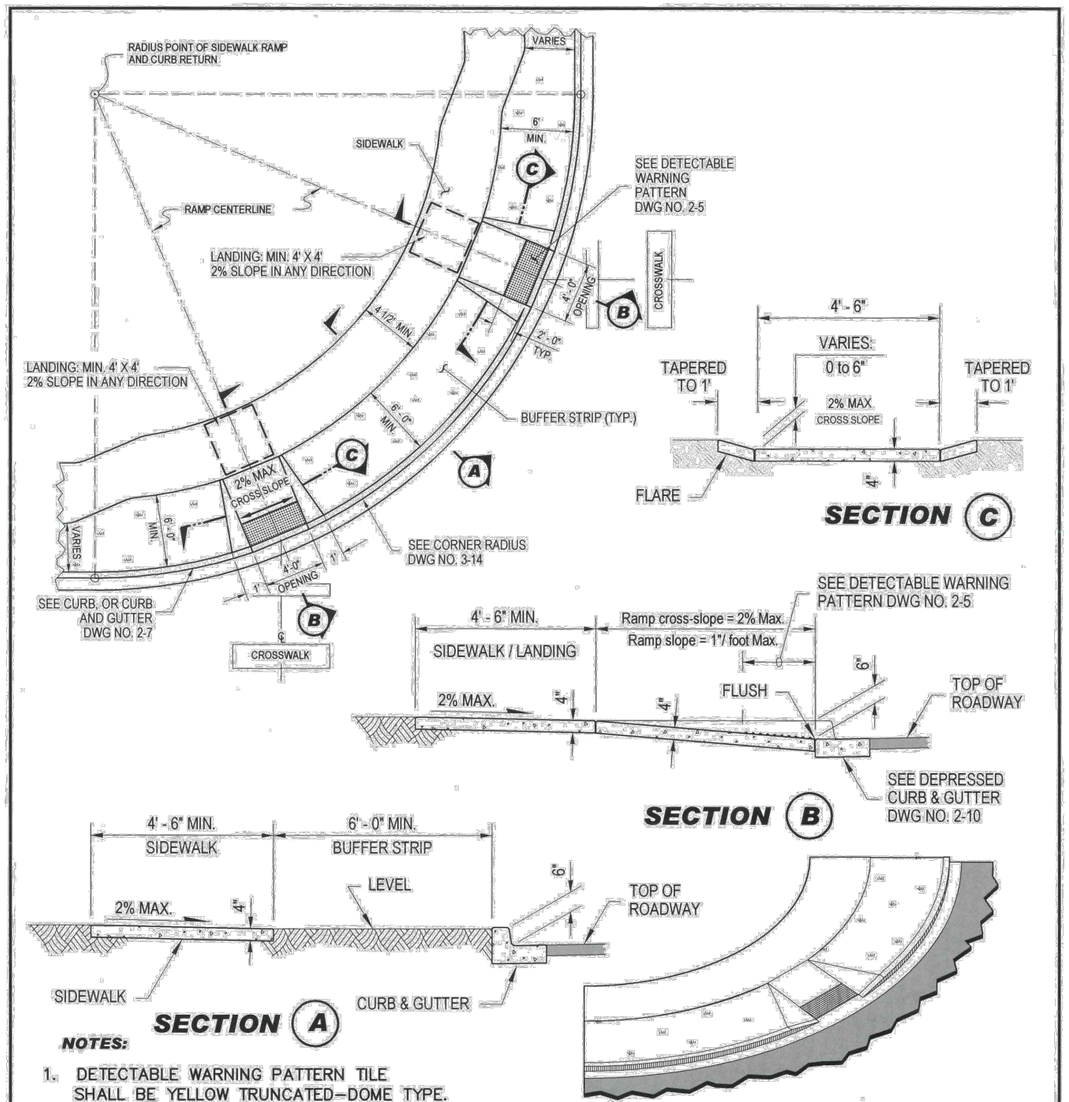

NOTES:

1. DETECTABLE WARNING PATTERN TILE SHALL BE YELLOW TRUNCATED-DOME TYPE.
2. RAMP SLOPES SHALL NOT BE STEEPER THAN 12H:1V.
3. A 4' x 4' LANDING AT THE TOP OF THE RAMP WITH 2% SLOPE IN ALL DIRECTIONS AND A 4' X 4' CLEAR SPACE WITHIN THE CROSSWALK AREA.
4. PLACEMENT OF DRAINAGE STRUCTURES, JUNCTION BOXES OR OTHER OBSTRUCTIONS WITHIN/ OR FRONT OF RAMP OR LANDING IS PROHIBITED.
5. THIS RAMP SHALL BE USED WITH HIGH BACK AND ROLLED CURB.

\Standards\2010-Standards\2-Concrete\Perpend_Type3.dwg

CITY OF LEWISTON, IDAHO
PUBLIC WORKS DEPARTMENT

SIDEWALK RAMP TYPE 3

APPROVED FOR PUBLICATION
City Engineer — Date 9/1/10

DWG. NO. 2-13

REVISIONS	
DATE	DESCRIPTION

DESIGNED: WER
DESIGN CHECKED: GEH
DETAILED: WER
DRAWING APPROVED: PAO

SCALES SHOWN ARE FOR 11" X 17" PRINTS ONLY
CADD FILE NAME L18-051_37.dwg
DRAWING DATE: FEBRUARY, 2020

IDAHO TRANSPORTATION DEPARTMENT
TD&H ENGINEERING

PROJECT NO. TR036

STANDARD DRAWING
BRYDEN AVENUE & 5TH STREET INTERSECTION
LEWISTON, IDAHO

English
COUNTY NEZ PERCE
KEY NUMBER XXXXX
SHEET 37 OF 73

PROFESSIONAL ENGINEER LICENSED 7654 02/28/2020 STATE OF IDAHO PHILLIP A. ODEGARD

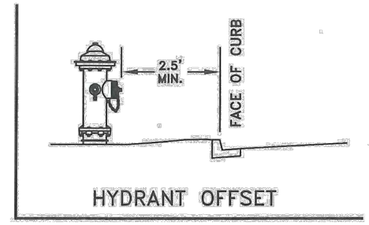

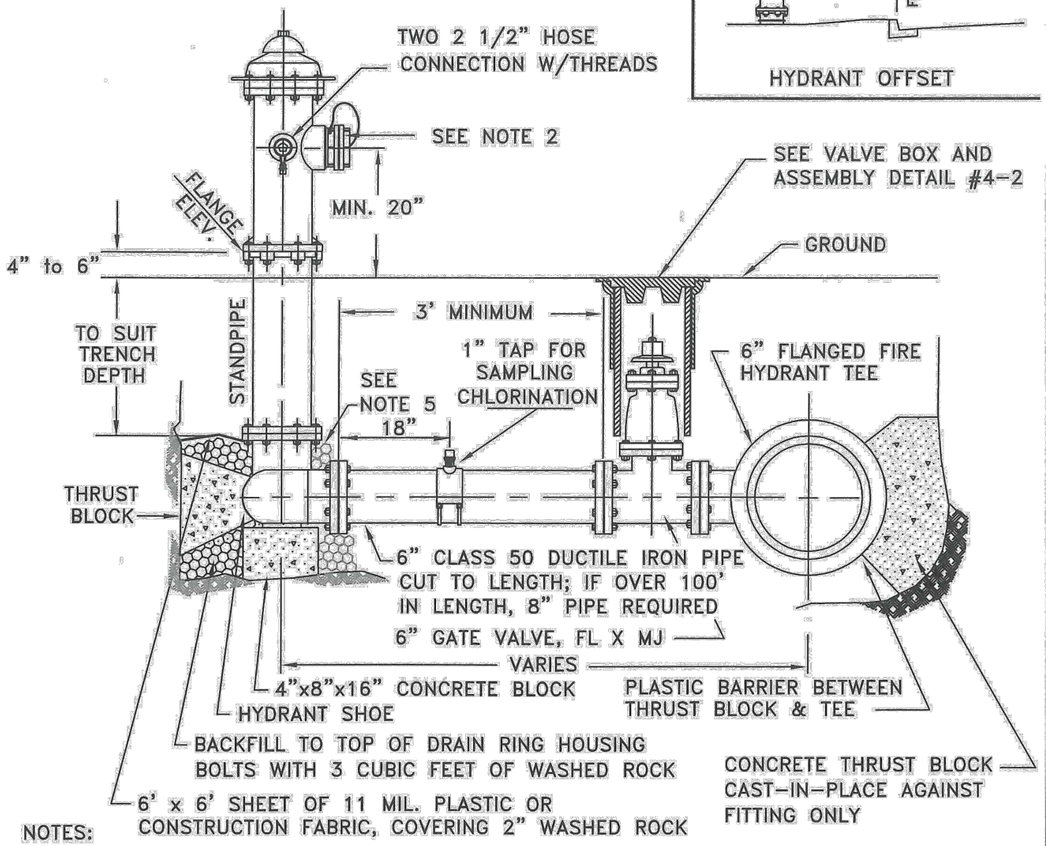

NOTES:

1. FIRE HYDRANT SHALL BE MUELLER SUPER CENTURION, WATEROUS PACER WITH 16" UPPER STANDPIPE OR EAST JORDAN IRON WORKS WATERMASTER.
2. HARRINGTON STORZ ADAPTER (4 1/2" NH x 5" STORZ) AND BLIND CAP (5" STORZ) W/ AIRCRAFT CABLE AT THE 4 1/2" PUMPER NOZZLE.
3. FIRE HYDRANT SHALL BE SPACED AT A MAX. OF 500 FEET IN RESIDENTIAL AREAS AND 300 FEET IN COMMERCIAL AREAS.
4. A MINIMUM 3 FOOT RADIUS OF UNOBSTRUCTED WORKING AREA SHALL BE PROVIDED AROUND ALL HYDRANTS.
5. GRIP PACKS OR ALL THREAD REQUIRED WITH THRUST BLOCK.

... Current Stds\4-Water\Fire Hydrant.dwg

CITY OF LEWISTON, IDAHO
PUBLIC WORKS DEPARTMENT

FIRE HYDRANT W/ SHUT-OFF VALVE

APPROVED FOR PUBLICATION
City Engineer — Date 5/6/15

DWG. NO. 4-12

REVISIONS	
DATE	DESCRIPTION

DESIGNED: WER
DESIGN CHECKED: GEH
DETAILED: WER
DRAWING APPROVED: PAO

SCALES SHOWN ARE FOR 11" X 17" PRINTS ONLY
CADD FILE NAME L18-051_38.dwg
DRAWING DATE: FEBRUARY, 2020

IDAHO TRANSPORTATION DEPARTMENT
TD&H ENGINEERING

PROJECT NO. TR036

STANDARD DRAWING
BRYDEN AVENUE & 5TH STREET INTERSECTION
LEWISTON, IDAHO

English
COUNTY NEZ PERCE
KEY NUMBER XXXXX
SHEET 38 OF 73

PROFESSIONAL ENGINEER LICENSED 7654 02/28/2020 STATE OF IDAHO PHILLIP A. ODEGARD

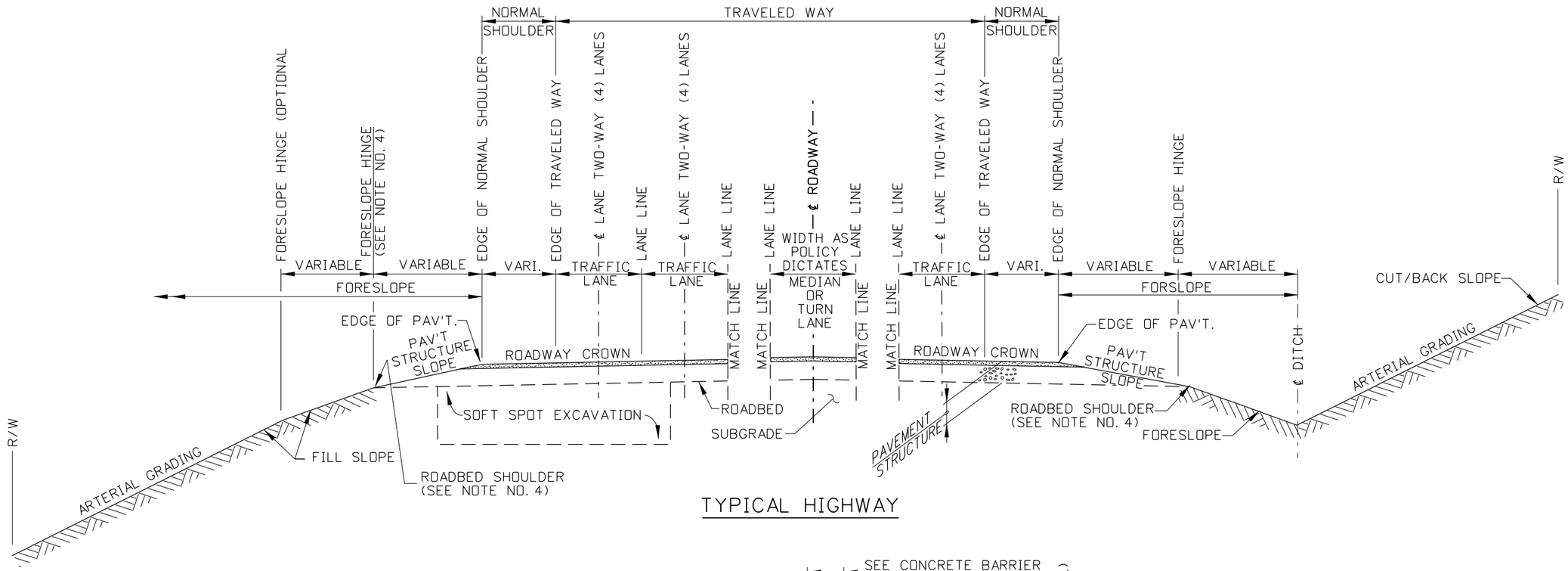

TYPICAL HIGHWAY

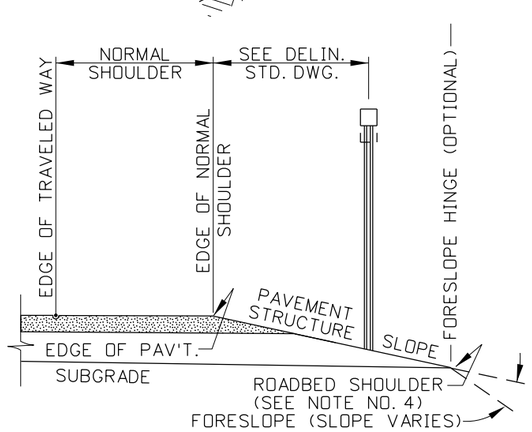

DELINEATOR INSTALLATION

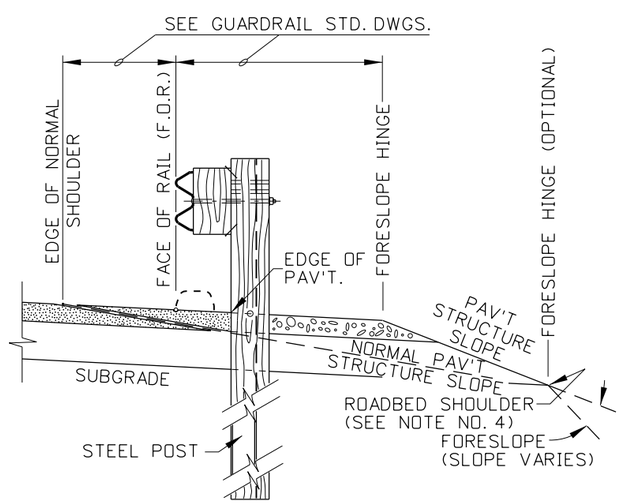

STANDARD W-BEAM INSTALLATION (ASPHALT)

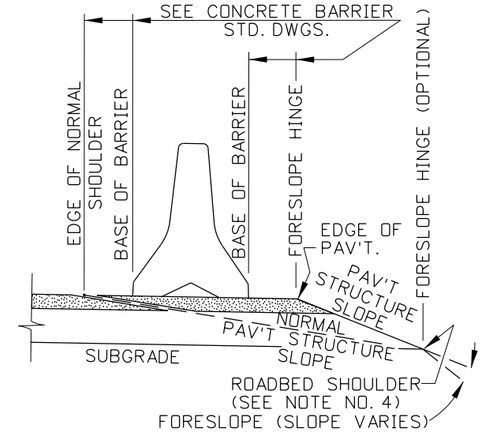

CONCRETE BARRIER INSTALLATION

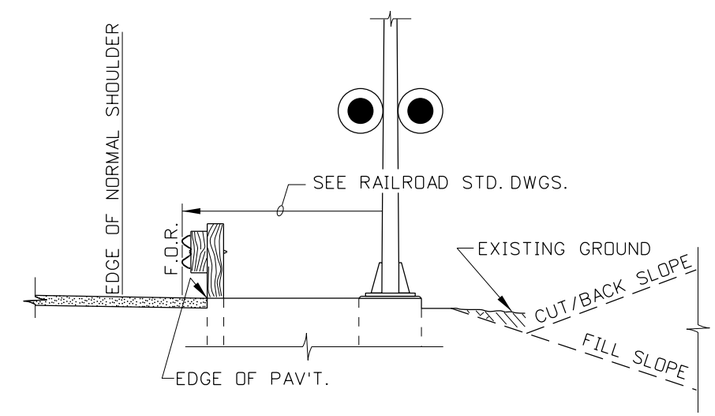

RAILROAD INSTALLATION WITH GUARDRAIL

REVISIONS								
NO.	DATE	BY	DESCRIPTION	DESIGNED	SCALES SHOWN ARE FOR 11" X 17" PRINTS ONLY	IDAHO TRANSPORTATION DEPARTMENT	PROJECT NO.	STANDARD DETAIL A-9
				DESIGN CHECKED				ITD ROADWAY NOMENCLATURE LOCATIONS & EXAMPLES
				DETAILED	CADD FILE NAME			
				DRAWING CHECKED	DRAWING DATE:			

English
COUNTY
KEY NUMBER
SHEET 1 OF 4

NOT APPROVED
PRELIMINARY
FOR CONSTRUCTION

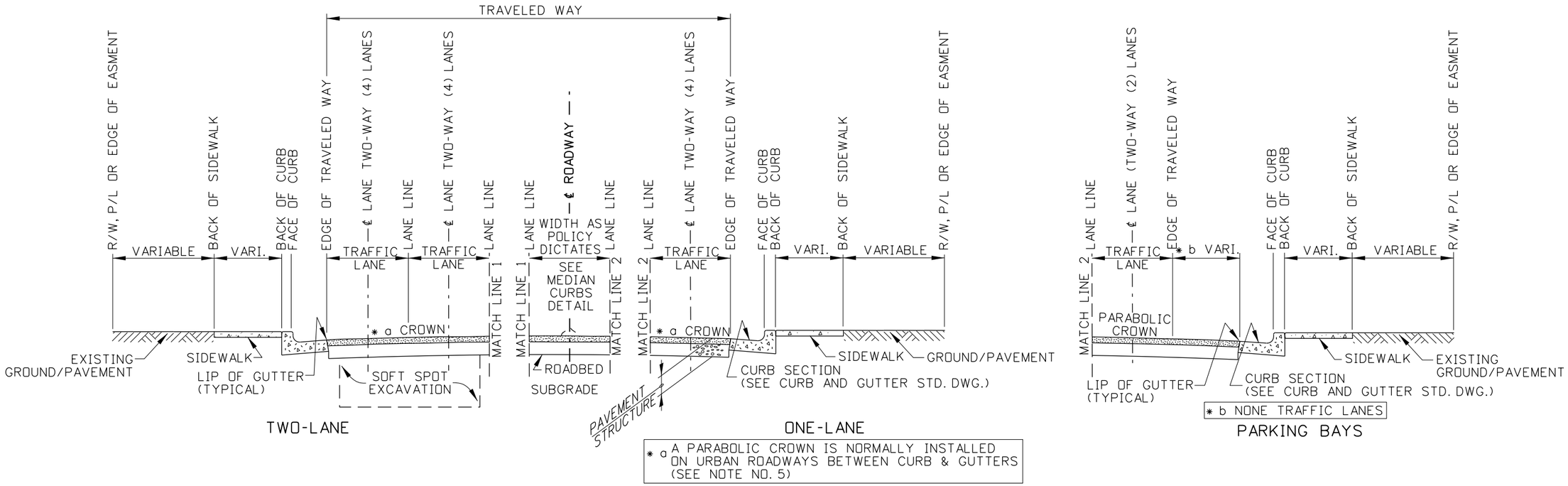

TYPICAL URBAN STREET

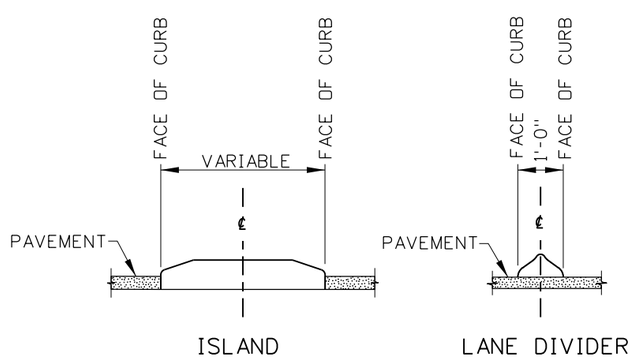

MEDIAN CURBS

(SEE CURB AND GUTTER STD. DWG.)

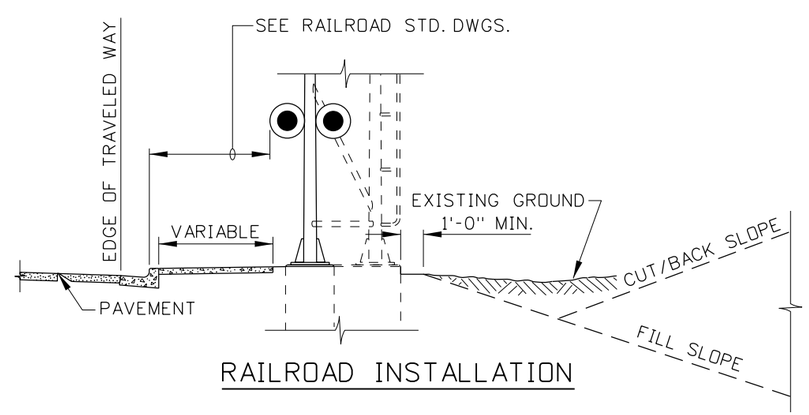

RAILROAD INSTALLATION

REVISIONS							
NO.	DATE	BY	DESCRIPTION	DESIGNED	SCALES SHOWN ARE FOR 11" X 17" PRINTS ONLY	IDAHO TRANSPORTATION DEPARTMENT	PROJECT NO.
				DESIGN CHECKED			
				DETAILED	CADD FILE NAME		
				DRAWING CHECKED	DRAWING DATE:		

STANDARD DETAIL A-9

ITD ROADWAY NOMENCLATURE LOCATIONS & EXAMPLES

English

COUNTY

KEY NUMBER

SHEET 2 OF 4

NOT APPROVED

PRELIMINARY

FOR CONSTRUCTION

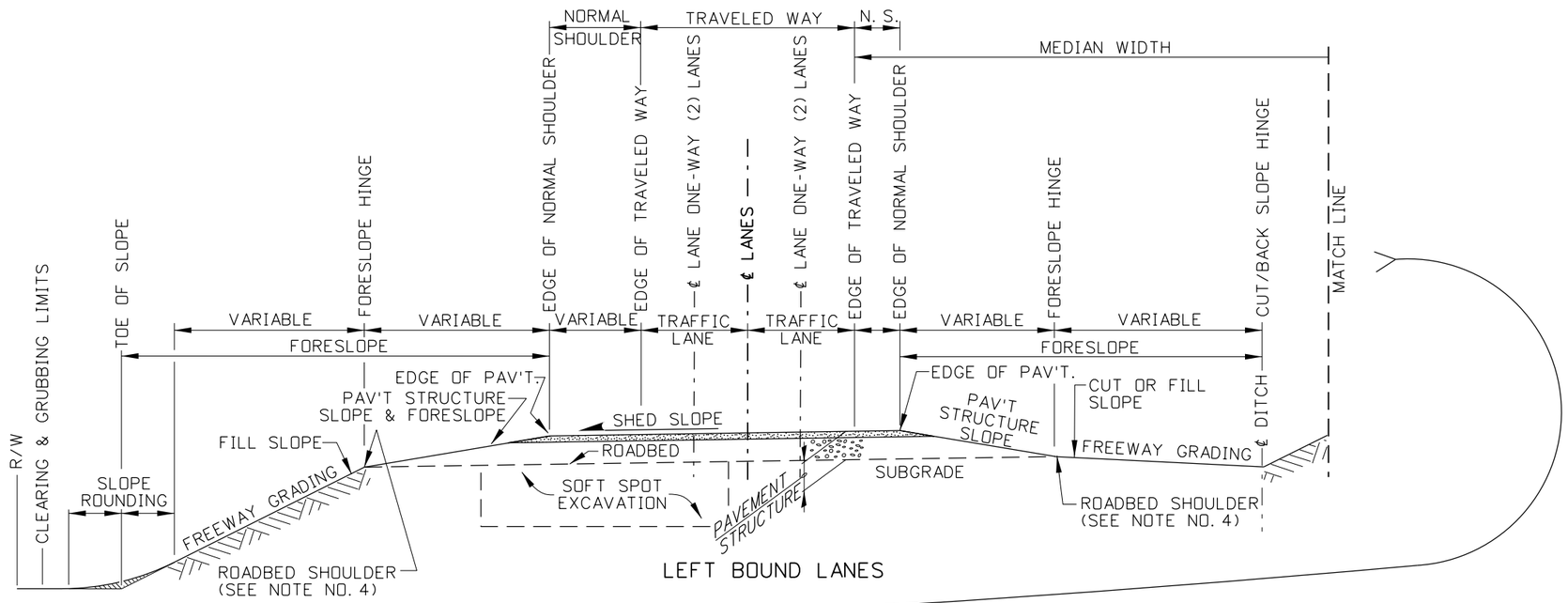

LEFT BOUND LANES

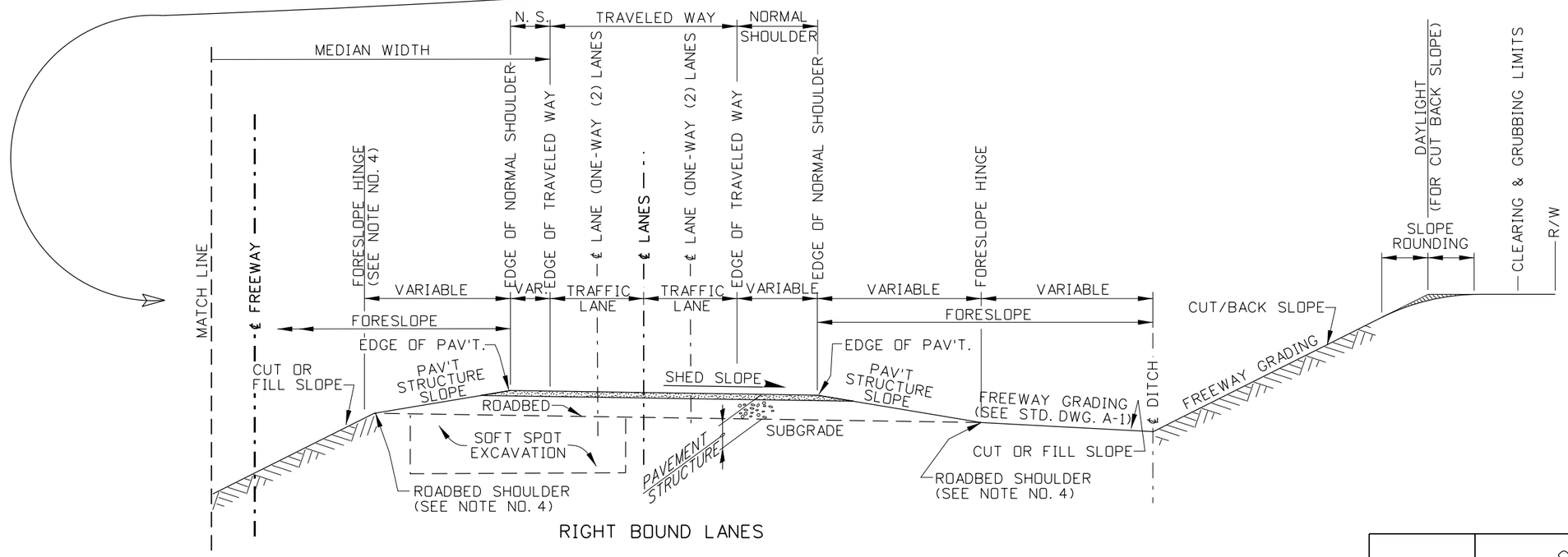

RIGHT BOUND LANES

TYPICAL MULTI-LANE HIGHWAY

REVISIONS			
NO.	DATE	BY	DESCRIPTION

DESIGNED	SCALES SHOWN ARE FOR 11" X 17" PRINTS ONLY	IDAHO TRANSPORTATION DEPARTMENT
DESIGN CHECKED		
DETAILED	CADD FILE NAME	
DRAWING CHECKED	DRAWING DATE:	

PROJECT NO.

STANDARD DETAIL A-9

ITD ROADWAY NOMENCLATURE LOCATIONS & EXAMPLES

English

COUNTY

KEY NUMBER

SHEET 3 OF 4

NOT APPROVED

PRELIMINARY FOR CONSTRUCTION

DEFINITIONS

* THESE TERMS ARE NOT NORMALLY USED ON STANDARD DRAWINGS.

BACK OF CURB: THE BEGINNING OF SIDEWALK OR UTILITY STRIP. ALSO USED FOR SURVEY CONTROL LINE.

*PAVEMENT STRUCTURE: THE STRUCTURE THAT IS CONSTRUCTED ON THE ROADBED AND TYPICALLY INCLUDES SURFACING, BASE COURSES, AND GRANULAR SUBBASE.

PAVEMENT STRUCTURE SLOPE: THE PRIMARY PORTION OF THE FORESLOPE, BEGINNING AT THE EDGE OF PAVEMENT AND ENDING AT THE ROADBED SHOULDER.

BASE OF BARRIER: WHERE THE BASE OF CONCRETE BARRIER TOUCHES THE PAVEMENT (THE POINTS OF MEASUREMENT).

*CLEAR ZONE: THE ROADSIDE PORTION THAT IS BEYOND THE TRAVELED WAY AND IS AVAILABLE FOR USE BY ERRANT VEHICLES.

*CLEARING & GRUBBING LIMITS: AN AREA WITHIN THE ROADWAY CORRIDOR THAT ORGANIC MATTER IS REMOVED PRIOR TO PLACEMENT OF EMBANKMENT OR REMOVAL OF EXCAVATION.

CENTERLINE (C/L): THE CENTERLINE OF ROADWAY, TRAFFIC LANE(S), OR FREEWAY. ALSO REFERRED TO AS THE TRAFFIC MARKINGS THAT DELINEATE THE DIVISION OF OPPOSING TRAFFIC (SEE CONTROL LINE).

CONTROL LINE: A SURVEY LINE FROM WHICH ROADWAY DIMENSIONS ARE MEASURED (NOT NECESSARILY THE SAME AS THE ROADWAY CENTERLINE.

CUT/BACK SLOPE: AN ASCENDING SLOPE FROM THE EDGE OF FORESLOPE OR BOTTOM OF DITCH TO DAYLIGHT.

EDGE OF NORMAL SHOULDER: WHERE THE NORMAL SHOULDER ENDS.

EDGE OF PAVEMENT: THE EDGE OF THE TRAVELABLE PAVEMENT, WHERE THE PAVEMENT STRUCTURE SLOPE BREAKS DOWN FROM THE ROADWAY WIDTH.

FACE OF RAIL (F.O.R.): A VERTICAL LINE ALONG THE INNER MOST PART OF METAL GUARDRAIL THAT FACES THE ROADWAY.

FILL SLOPE: A DESCENDING SLOPE OF COMPACTED MATERIAL FROM THE EDGE OF ROADBED TO TOE OF SLOPE.

FORESLOPE: ANY DESCENDING SLOPE OR COMBINATION OF SLOPES FROM THE EDGE OF PAVEMENT TO THE BEGINNING OF A CUT/BACK SLOPE, BOTTOM OF DITCH, OR THE TOE OF SLOPE OF AN ADJACENT ROADWAY.

HIGHWAY: THE ENTIRE RIGHT-OF-WAY.

HINGE (POINT): A BREAKING POINT OF THE ROADWAY CROWN, PARABOLIC CROWN, PAVEMENT STRUCTURE SLOPE, FORESLOPE, FILL SLOPE, OR CUT SLOPE.

LANE LINE: EDGE OF A TRAFFIC LANE USUALLY DELINEATED BY A TRAFFIC MARKING LINE.

LIP OF GUTTER (L.O.G.): THE END OF THE CURB/GUTTER SECTION AND BEGINNING OF THE ROADWAY PAVEMENT. NORMALLY, THE CONTROL LINE WHEN A PARABOLIC CROWN IS INSTALLED.

MEDIAN: THE PORTION OF A DIVIDED HIGHWAY OR FREEWAY THAT SEPARATES THE TRAVELED WAYS FOR TRAFFIC IN OPPOSITE DIRECTIONS.

*MEDIAN WIDTH: THE WIDTH OF THE AREA BETWEEN THE TRAVELED WAYS OF TWO ROADWAYS.

NORMAL SHOULDER: THAT PORTION OF THE PAVED ROADWAY SURFACE OUTSIDE OF THE TRAVELED WAY.

PARABOLIC CROWN: A CROSS-SECTION FINISH GRADE THAT CONTAINS A PARABOLIC CURVE BETWEEN CURB & GUTTERS.

PLANS: APPROVED DRAWINGS OR REPRODUCTION OF APPROVED DRAWINGS THAT THE PROPOSED ROADWAY IS TO BE LET FOR CONTRACT AND CONSTRUCTED.

*PROFILE GRADE: A SERIES OF TANGENT GRADE LINES CONNECTED BY VERTICAL CURVES. IT IS TYPICALY PLACED ALONG THE ROADWAY CENTERLINE OF UNDIVIDED FACILITIES AND AT THE RIGHT/LEFT LIP OF GUTTER FOR PAROBOLIC CONTROL IN URBAN AREAS.

*ROADSIDE: THE AREA ADJOINING THE OUTER EDGE OF THE ROADWAY WITHIN THE RIGHT-OF-WAY. AREAS (ALSO CALLED MEDIAN) BETWEEN THE ROADWAYS OF A DIVIDED HIGHWAY SHALL ALSO BE CONSIDERED ROADSIDE.

ROADWAY BALLAST: COMBINED PAVEMENT STRUCTURE AND EMBANKMENT (FILL) MATERIAL, INCLUDING SHOULDER MATERIAL OUTSIDE THE ROADWAY PRISM.

*ROADWAY CORRIDOR: THAT PORTION OF THE HIGHWAY WITHIN THE LIMITS OF CONSTRUCTION.

ROADWAY: SEE ROADWAY CORRIDOR.

ROADWAY CROWN: A CROSS-SECTION FINISH GRADE THAT CONTAINS A PERCENT GRADE OR SLOPE (SHOWN ON THE TYPICAL SECTION).

*ROADWAY PRISM: THE ENGINEERED/STRUCTURAL PORTION OF THE HIGHWAY. INCLUDES THE PAVEMENT STRUCTURE PLUS THE AREA BETWEEN THE ROADBED SHOULDERS, OR BACK OF CURB, EXTENDING DOWNWARD AND OUTWARD AT THE SLOPE OF 1.5 H TO 1.0 V TO THE INTERCEPT OF NATURAL GROUND, REMOVAL LIMIT, OR SLOPE OF EMBANKMENT KEYING BENCHES. INCLUDED ELEMENTS ARE ROADWAY PAVEMENT STRUCTURE, EMBANKMENT FILL, FOUNDATIONS FOR EMBANKMENT, AND SOFT SPOT EXCAVATION/BACKFILL. EMBANKMENT FILL OUTSIDE OF THE 1.5*H TO 1.0*V SLOPE IS NOT CONSIDERED PART OF THE ROADWAY PRISM (SEE DETAIL).

*ROADWAY SHOULDER: ANY TRAVELABLE PORTION OF THE ROADWAY OUTSIDE OF THE TRAVELED WAY.

*ROADWAY WIDTH: FROM EDGE OF PAVEMENT TO EDGE OF PAVEMENT.

SHED SECTION: A CROSS-SECTION FINISH GRADE THAT CONTAINS A SINGLE PERCENT GRADE OR SLOPE (SHOWN ON THE TYPICAL SECTION).

SHY LINE OFFSET: THE DISTANCE FROM THE EDGE OF THE TRAVELED WAY, BEYOND WHICH A ROADSIDE OBJECT WILL NOT BE PERCEIVED AS AN OBSTACLE AND RESULT IN A MOTORIST'S REDUCING SPEED OR CHANGING VEHICLE POSITION ON THE ROADWAY (SEE 2006 AASHTO ROADSIDE DESIGN GUIDE, TABLE 5.5)

SHOULDER: THE PORTION OF THE ROADWAY CONTIGUOUS WITH THE TRAVELED WAY FOR THE ACCOMMODATION OF STOPPED VEHICLES, FOR EMERGENCY USE, AND FOR LATERAL SUPPORT OF BASE AND SURFACE COURSES (SEE NORMAL SHOULDER).

SLOPE: THE RELATIVE STEEPNESS OF THE TERRAIN EXPRESSED AS A RATIO OR PERCENTAGE,

SLOPE ROUNDING: THE INTRODUCTION OF A VERTICAL CURVE BETWEEN TWO SLOPES TO MINIMIZE THE ABRUPT SLOPE CHANGE.

ROADBED: THE TOP OF SUBGRADE, UPON WHICH THE PAVEMENT STRUCTURE, CURBS, SIDEWALKS, MEDIAN AND OTHER INCIDENTAL FACILITIES ARE CONSTRUCTED.

ROADBED SHOULDER: EDGE OF ROADBED, WHERE THE BOTTOM OF THE ROADWAY PAVEMENT STRUCTURE MEETS DAY LIGHT AT THE FORESLOPE OR FILL SLOPE.

SOFT SPOT EXCAVATION: EXCAVATION BELOW OR BEYOND THE NORMAL ROADWAY PRISM USUALLY DUE TO SUBGRADE MATERIAL THAT WILL NOT SUPPORT A NORMAL ROADWAY BALLAST. SMALL QUANTITIES AT SPECIFIC LOCATIONS THAT ARE USUALLY NOT SHOWN ON THE PLANS.

TOE OF SLOPE: WHERE THE BOTTOM OF A SLOPE (USUALLY A FILL SLOPE) INTERSECTS THE NATURAL GROUND OR BOTTOM OF DITCH.

*TRAFFIC LANE: THE PORTION OF THE TRAVELED WAY FOR THE MOVEMENT A SINGLE LINE OF VEHICLES.

TRAVELED WAY: THAT PORTION OF THE ROADWAY CORRIDOR THAT IS DESIGNATED FOR VEHICULAR TRAVEL NOT INCLUDING THE ROADWAY SHOULDERS.

TYPICAL SECTION: AN ELEVATION DETAIL IN THE PLANS WHICH IS A ROADWAY CROSS-SECTION THAT INCLUDES A TRAVERSE FINISH GRADE PROFILE, THE PAVEMENT STRUCTURE REQUIREMENTS AND BASIC ROADWAY CONSTRUCTION DIMENSIONS.

*URBAN STREET: A PAVED STREET WITH A PARABOLIC CROWN CONNECTING CURB AND GUTTER EDGES.

THE ROADWAY PRISM IS REPRESENTED BY THE CROSS-HATCHED AREA THAT INCLUDES PAVEMENT STRUCTURE AND SUBGRADE, BUT NOT NATURAL GROUND (NOTE: TOP SOIL AND ORGANIC MATTER REMOVED).

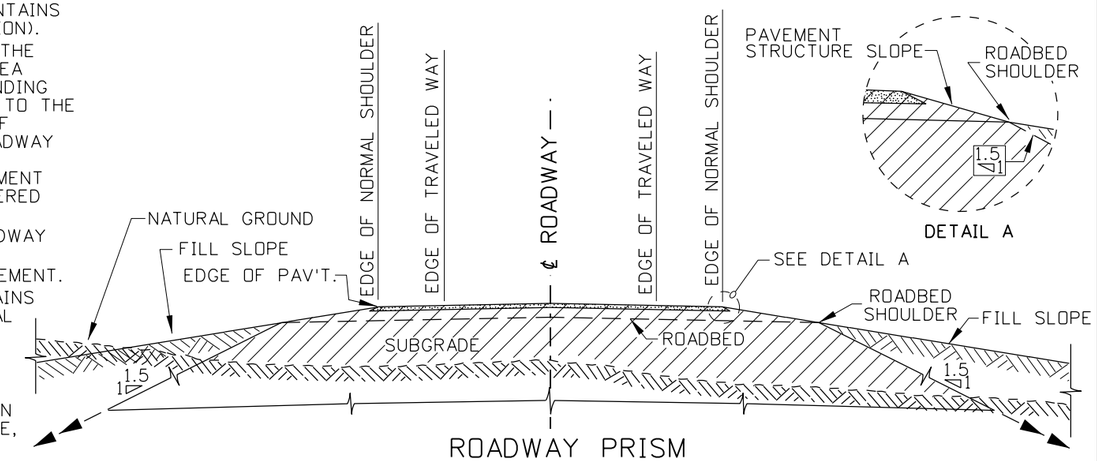

ROADWAY PRISM

NOTES

1. THE ITEMS AND TERMS SHOWN ARE INTENDED TO BE GENERAL EXAMPLES AND SHALL NOT HAVE PRECEDENCE OF ANY DEFINITION CONTAINED IN THE PLANS OR STANDARD SPECIFICATIONS. SOME DEFINITIONS AND USAGE HEREIN MAY BE UNIQUE TO THE IDAHO TRANSPORTATION DEPARTMENT (ITD).

2. ADDITIONAL DEFINITION OF TERMS CAN BE FOUND IN THE AASHTO ROADSIDE DESIGN GUIDE AND THE ITD STANDARD SPECIFICATIONS FOR HIGHWAY CONSTRUCTION.

3. REFER TO THE APPROPRIATE STANDARD DRAWING WHEN INSTALLING GUARDRAIL.

4. REFER TO THE APPROPRIATE STANDARD DRAWING WHEN INSTALLING STANDARD CONCRETE BARRIER.

5. REFER TO THE APPROPRIATE STANDARD DRAWING WHEN A RAILROAD CROSSING IS INVOLVED.

6. REFER TO THE APPROPRIATE STANDARD DRAWING WHEN CURB OR CURB AND GUTTER IS USED.

7. A FORESLOPE HINGE POINT IS NOT NECESSARILY AT THE EDGE OF ROADBED (SEE DEFINITION OF FORESLOPE).

REVISIONS			
NO.	DATE	BY	DESCRIPTION

DESIGNED	SCALES SHOWN ARE FOR 11" X 17" PRINTS ONLY	IDAHO TRANSPORTATION DEPARTMENT
DESIGN CHECKED		
DETAILED	CADD FILE NAME	
DRAWING CHECKED	DRAWING DATE:	

PROJECT NO.

STANDARD DETAIL A-9

ITD ROADWAY NOMENCLATURE LOCATIONS & EXAMPLES

English

COUNTY

KEY NUMBER

SHEET 4 OF 4

NOT APPROVED

PRELIMINARY FOR CONSTRUCTION

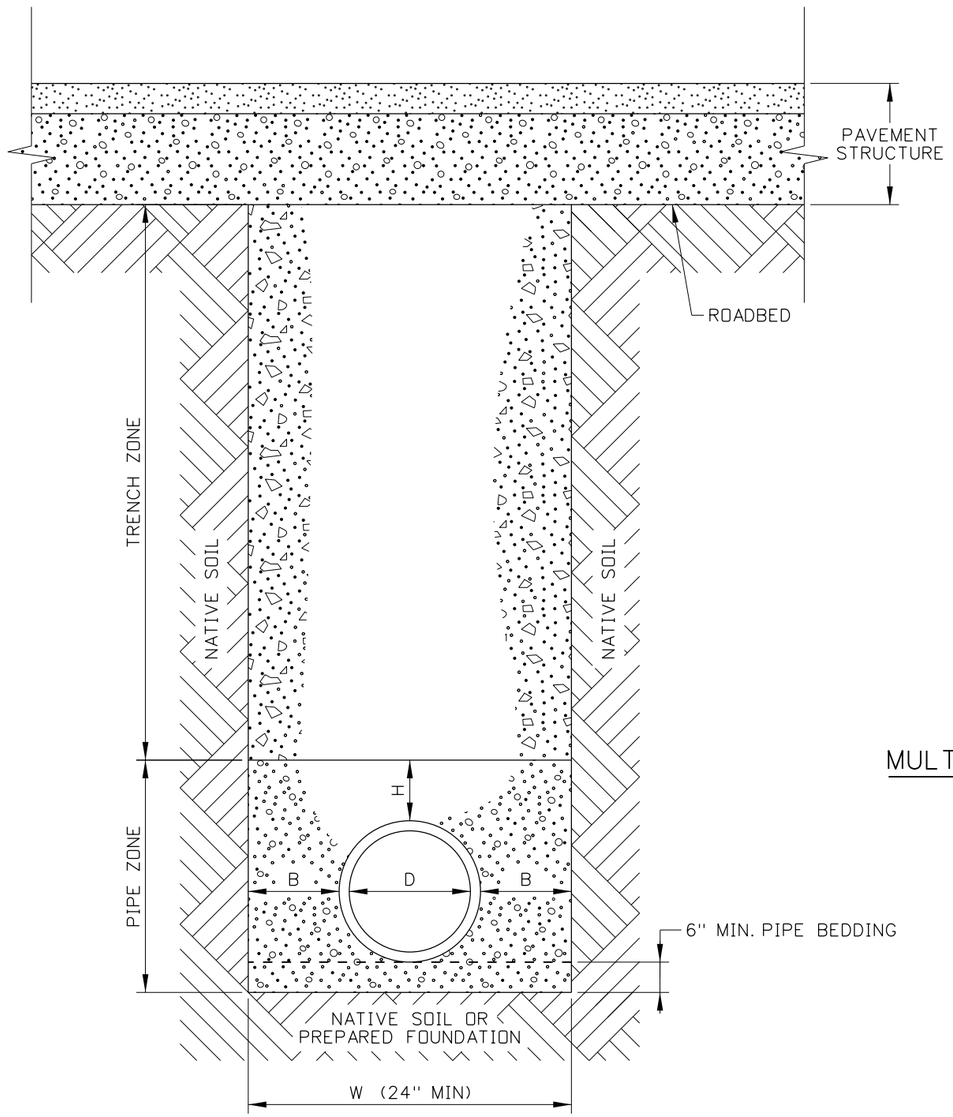

MATERIALS AND COMPACTION TABLE				
PIPE LOCATION	PIPE ZONE		TRENCH ZONE	
	MATERIAL REQUIREMENT	COMPACTION REQUIREMENT	MATERIAL REQUIREMENT	COMPACTION REQUIREMENT
INSIDE ROADWAY PRISM	¾" AGGREGATE (703.04) (SEE NOTE NO. 1)	6" MAX. LOOSE LIFTS, COMPACTED TO 95% OF AASHTO T-99 OR IT-74 (SEE NOTE NO. 3)	¾" AGGREGATE (703.04) (SEE NOTE NO. 1)	CLASS A COMPACTION. (SEE NOTE NO. 2)
OUTSIDE ROADWAY PRISM	¾" AGGREGATE (703.04) (SEE NOTE NO. 1)	6" MAX. LOOSE LIFTS, COMPACTED TO 95% OF AASHTO T-99 OR IT-74 (SEE NOTE NO. 3)	GRANULAR BORROW OR NATIVE MATERIALS WITH MAXIMUM SIZE OF 6" AND FREE FROM WOOD WASTE OR DELETERIOUS MATERIALS. (SEE NOTE NO. 1)	CLASS D COMPACTION

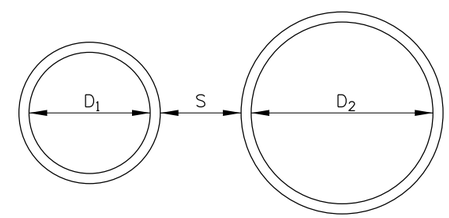

MULTIPLE PIPE INSTALLATION DETAIL

DIMENSION TABLE (SEE NOTE NOS. 4 AND 5)			
D (INCHES)	B (INCHES)	H (INCHES)	S (INCHES)
≤ 6	10	8	24
7 TO 15	12	10	24
16 TO 30	18	12	24
> 30	24	14	GREATER OF 24 OR D/2

NOTES

1. CONTROLLED DENSITY FILL (FLOWABLE FILL) MATERIAL OR PEA GRAVEL CAN BE USED IF APPROVED BY THE ENGINEER.

2. CLASS D COMPACTION IN MEDIAN AND OUTSIDE 2H:1V SLOPE.

3. LOOSE LIFT THICKNESS DIRECTLY ON TOP OF PIPE MAY BE INCREASED TO PREVENT DAMAGE TO PIPE DURING COMPACTION. CLASS D COMPACTION MAY BE APPLIED OUTSIDE THE ROADWAY PRISM IF APPROVED BY THE ENGINEER.

4. WHEN TWO DIFFERENT DIAMETER PIPES ARE INSTALLED, USE THE LARGER D DIMENSION TO DETERMINE THE S DIMENSION.

5. FOR PIPE DIAMETERS GREATER THAN 36 INCHES, THE B DIMENSION SHOULD BE EQUAL TO THE PIPE DIAMETER WHEN THE PIPE INSTALLED DURING EMBANKMENT CONSTRUCTION.

6. DRAWINGS NOT TO SCALE.

ORIGINAL STORED AT: ITD, Headquarters 3311 West State Boise, Idaho

ORIGINAL SIGNED BY: TRI BUU DATE ORIGINAL SIGNED: MAY 8, 2014

REVISIONS								
NO.	DATE	BY	NO.	DATE	BY	NO.	DATE	BY

SCALES SHOWN ARE FOR 11" X 17" PRINTS ONLY

CADD FILE NAME: d12_0514.dgn

DRAWING DATE: May, 2014

IDAHO TRANSPORTATION DEPARTMENT

BOISE IDAHO

ORIGINAL SIGNED BY: CARL D. MAIN

DESIGN/TRAFFIC SERVICES ENGINEER

STANDARD DRAWING

PIPE & CONDUIT INSTALLATION

English

STANDARD DRAWING NO.

D-12

SHEET 1 OF 1

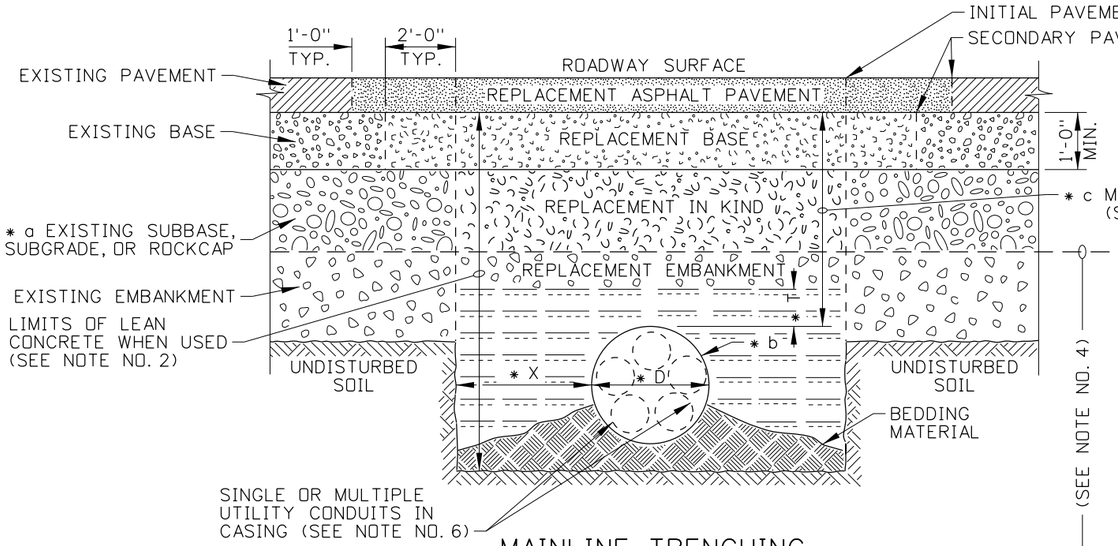

MAINLINE TRENCHING

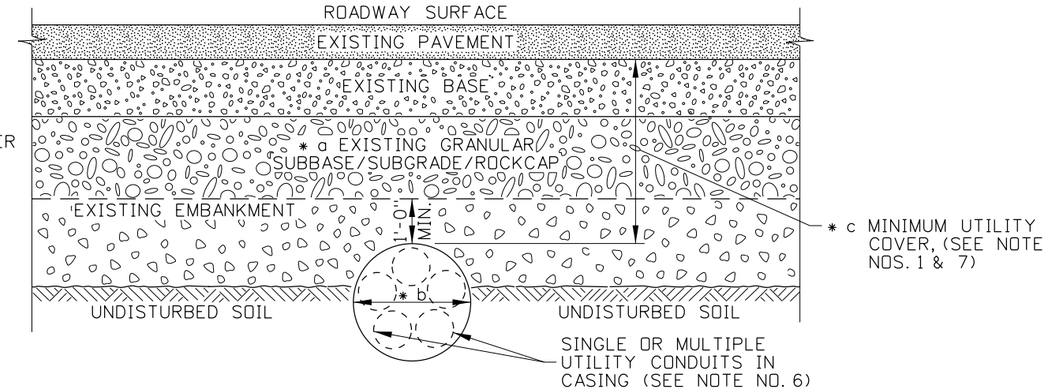

JACKING, DRIVING, OR BORING

ASPHALT PAVEMENT SURFACE: REQUIRED ON ALL RURAL PRIVATE & COMMERCIAL APPROACHES. PAVED TO A MINIMUM DEPTH OF 3". ALL PUBLIC APPROACH PAVING & BALLAST DEPTHS SHALL MEET LOCAL HIGHWAY DISTRICT OR CITY REQUIREMENTS (SEE NOTE NO. 5).

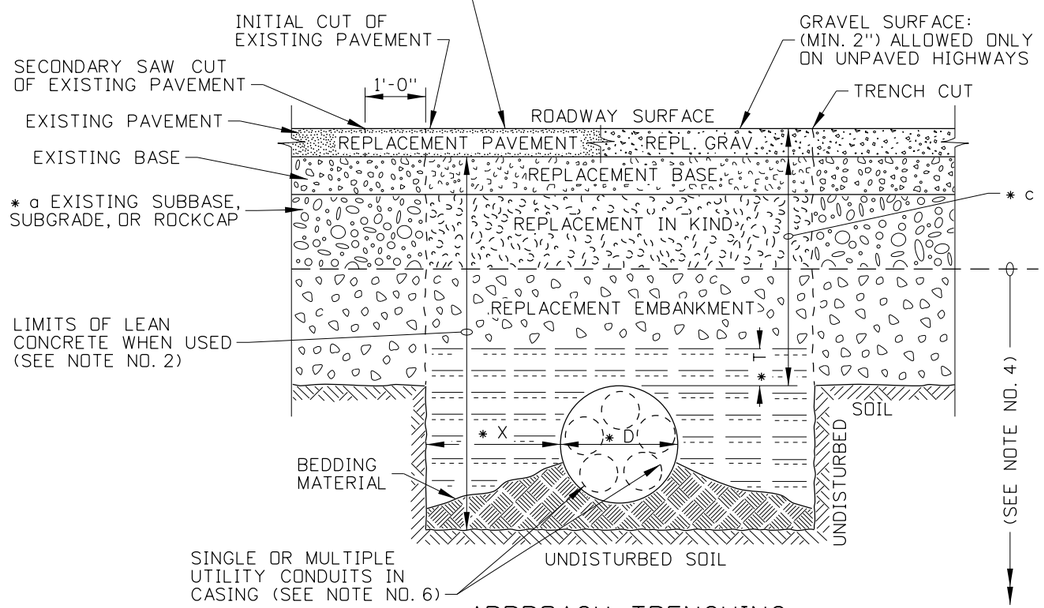

APPROACH TRENCHING

SUB-NOTES

* a	SOME ROADWAYS MAY HAVE A GRANULAR SUBBASE, OR ROCKCAP OR, EMBANKMENT WITH NO SUBBASE. (SEE NOTE NOS. 2 &3).
* b	CONDUIT/CULVERT SIZE IS MIN. 1'-0" (SEE NOTE NO. 1).
* c	SOME UTILITIES REQUIRE GREATER DEPTH. (SEE NOTE NOS. 1 & 7).

SEE STANDARD DRAWING D-12 FOR DEFINITIONS OF:

* D, * T, & * X

NOTES

1. THE DESCRIPTION OF CONDUIT SHALL INCLUDE CULVERTS, PIPES, AND CASINGS USED FOR THE PURPOSE OF CONVEYING WATER, PETROLEUM PRODUCTS, AND UNDERGROUND UTILITIES. THE METHOD OF INSTALLATION (JACKING, DRIVING, OR BORING AND TRENCHING) SHALL MEET THE REQUIREMENTS OF THE "UTILITIES ACCOMMODATIONS", APPENDIX B, OF THE ITD DESIGN MANUAL AND THE REQUIREMENTS OF, STATE, COUNTY OR OTHER LOCAL AUTHORITY.
2. THE USE OF LEAN CONCRETE AS BACKFILL MATERIAL IN OPEN TRENCH CROSSINGS ON ROADWAYS AND APPROACHES MAY BE REQUIRED BY THE PERMITTING ENTITY. LEAN CONCRETE FOR THE REPLACEMENT OF BASE, SUBBASE, AND EMBANKMENT SHALL REQUIRE AN APPROVED MIX DESIGN.
3. WHEN REPLACEMENT MATERIAL FOR THE BASE, SUBBASE, AND/OR EMBANKMENT IS NOT LEAN CONCRETE, THEN THE REPLACEMENT MATERIALS AND COMPACTION OF THE BASE COURSE(S) SHALL BE IN ACCORDANCE WITH SECTION 303 - AGGREGATE BASE AND THE SUBBASE SHALL BE IN ACCORDANCE WITH SECTION 301 - GRANULAR SUBBASE OF THE ITD STANDARD SPECIFICATIONS FOR HIGHWAY CONSTRUCTION (NOTE: WHEN A ROCKCAP IS ENCOUNTERED THE REPLACEMENT MATERIAL SHALL BE IN KIND OR AS DIRECTED BY THE ENGINEER).
4. ALL CONDUIT PLACEMENT BY OPEN TRENCHING SHALL MEET THE REQUIREMENTS OF STANDARD DRAWING D-12 - CONDUIT INSTALLATION AND SECTION 210 - STRUCTURE EXCAVATION AND COMPACTING BACKFILL OF THE ITD STANDARD SPECIFICATIONS FOR HIGHWAY CONSTRUCTION.
5. WHEN THE PAVEMENT IS DISTURBED ON ROADWAYS AND/OR RURAL PRIVATE, COMMERCIAL, AND PUBLIC APPROACHES BY JACKING, DRIVING, BORING OR TRENCHING THE PAVEMENT SHALL BE RESTORED TO THE ORIGINAL DEPTH AND SMOOTHNESS.
6. UTILITY CONDUITS SHALL CONTAIN ADDITIONAL CARRIERS WHENEVER FEASIBLE TO ALLOW ACCESS FOR FUTURE USE. WHEN MULTIPLE CARRIERS ARE PLACED IN TRENCH WITHOUT CASING, THE CARRIERS SHALL BE SEPARATED BY 3" OF SAND OR SOIL CUSHION.
7. THE MINIMUM DEPTH COVER FOR CULVERTS CONVEYING WATER IS 2'-0". PIPELINES CARRYING LIQUID OR GAS PETROLEUM SHALL HAVE A MINIMUM DEPTH COVER AT ANY POINT UNDER THE ROADWAY PRISM OF 4'-0". UTILITIES FOR COMMUNICATION SHALL CONFORM TO THE 2'-0" MINIMUM DEPTH COVER (NOTE: MINIMUM DEPTH IS FROM UNDER PAVEMENT).
8. NOT TO SCALE.

ORIGINAL STORED AT: ITD, Headquarters 3311 West State Boise, Idaho

ORIGINAL SIGNED BY: MILFORD L. MILLER DATE ORIGINAL SIGNED: JANUARY 5, 2005

REVISIONS

NO.	DATE	BY	NO.	DATE	BY	NO.	DATE	BY
1	11-01	MSM						
2	01-05	MSM						

SCALES SHOWN ARE FOR 11" X 17" PRINTS ONLY

CADD FILE NAME: d13_0105.dgn

DRAWING DATE: FEBRUARY, 2000

IDAHO TRANSPORTATION DEPARTMENT

BOISE IDAHO

ORIGINAL SIGNED BY: LOREN THOMAS
ASSISTANT CHIEF ENGINEER (DEVELOPMENT)
ORIGINAL SIGNED BY: STEVEN HUTCHINSON
CHIEF ENGINEER

STANDARD DRAWING

CONDUIT INSTALLATION FOR EXISTING ROADWAYS & APPROACHES

REQUIRES STD. DWG. D-12

English

STANDARD DRAWING NO.

D-13

SHEET 1 OF 1

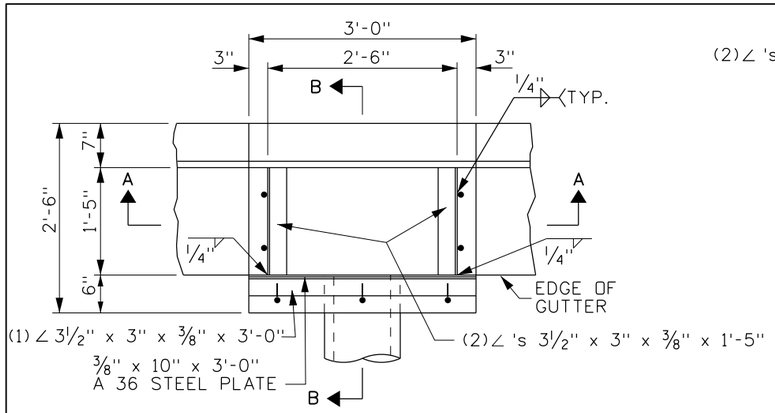

PLAN

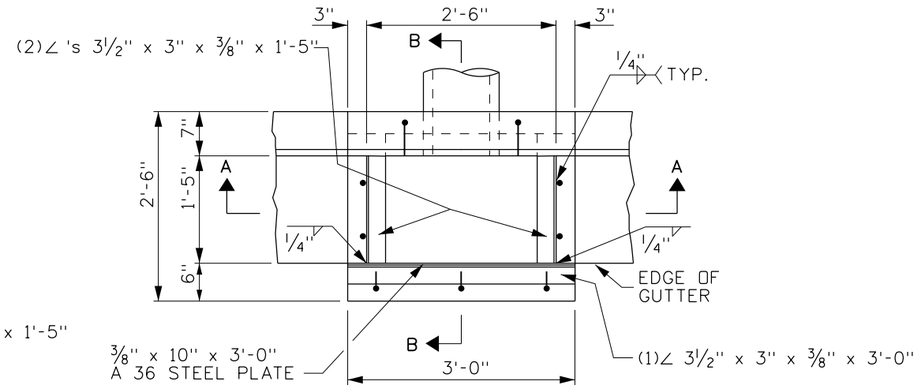

PLAN

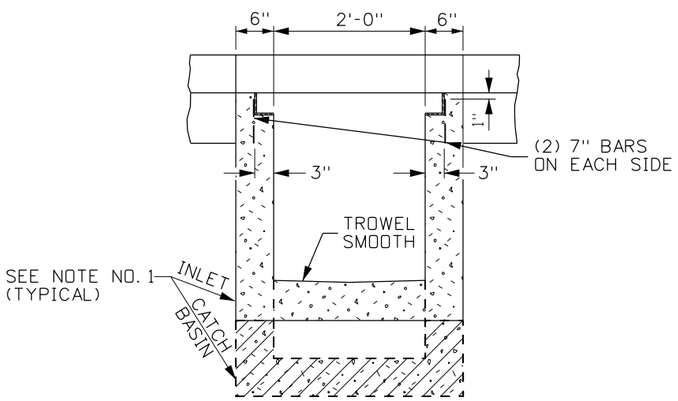

SECTION A-A

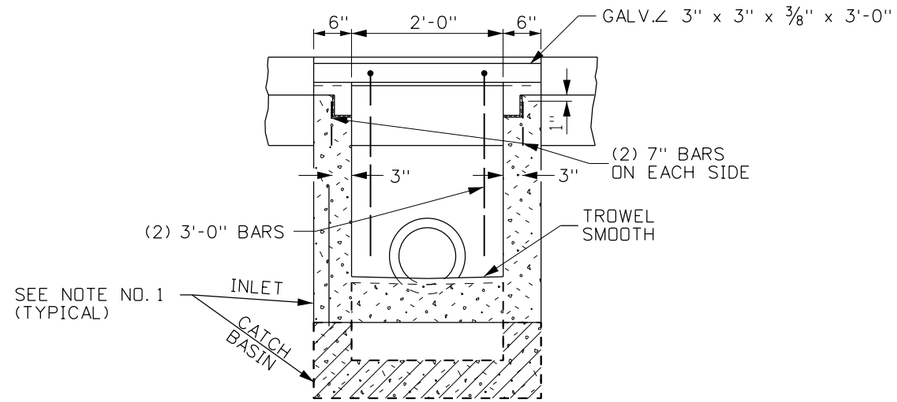

SECTION A-A

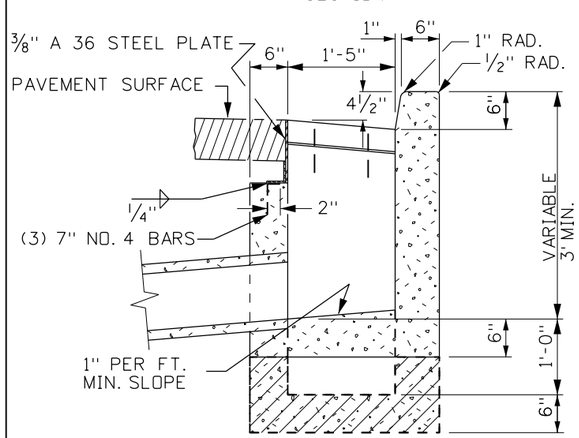

SECTION B-B

INLET - TYPE 1

CATCH BASIN - TYPE 1

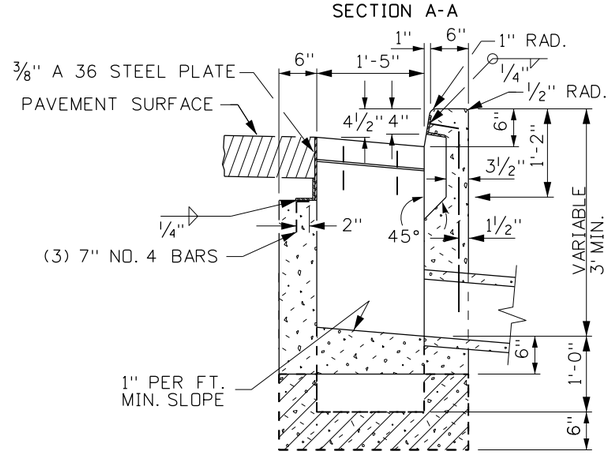

SECTION B-B

INLET - TYPE 2

CATCH BASIN - TYPE 2

NOTES

1. PATTERNS USED IN DRAWING:

   INLET SECTIONS:

   CATCH BASIN BOTTOMS:

   PAVEMENT:

2. INLETS AND CATCH BASINS MAY BE EITHER PRECAST OR CAST-IN-PLACE. PRECAST UNITS SHALL MEET THE REQUIREMENTS OF ASTM C 913. (PRIOR APPROVAL OF SHOP DRAWINGS WILL BE REQUIRED ON MODIFIED UNITS.)
3. A 1" SIDE DRAFT IS ALLOWED FOR FORM REMOVAL.
4. CAST-IN-PLACE INLETS AND CATCH BASINS SHALL CONFORM TO SECTION 609 - MINOR STRUCTURES OF THE CURRENT ITD STANDARD SPECIFICATIONS FOR HIGHWAY CONSTRUCTION.
5. THE GRADE LINE OF THE TOP INSIDE OF ANY PIPE SHALL ENTER AT A POINT NO LOWER THAN THE TOP INSIDE OF THE OUTLET PIPE.
6. PIPES CAN ENTER OR LEAVE THE BOX IN ANY DIRECTION. ALL CONNECTIONS AND BROKEN AREAS SHALL BE GROUTED SMOOTH.
7. STEEL ANGLES SHALL BE SET SO THAT EACH BEARING BAR OF PREFABRICATED GRATE SHALL HAVE FULL BEARING ON BOTH ENDS. THE FINISHED TOP OF CONCRETE SHALL BE EVEN WITH THE ANGLE/GRATE SURFACE. THE STRUCTURAL STEEL NEED NOT BE PAINTED BUT SHALL MEET THE REQUIREMENTS OF ASTM A 36.
8. ALL METAL REINFORCEMENT USED SHALL BE NO. 4 BARS. THE METAL REINFORCEMENT SHALL BE SMOOTH CUT TO ACCOMMODATE PIPES.
9. GRAY IRON CAST TO THE DIMENSIONS GIVEN FOR THE STEEL GRATES MAY BE USED. THE CASTINGS SHALL CONFORM TO AASHTO M306 CLASS 35B GRAY IRON CASTINGS.
10. INLET/CATCH BASIN GRATES MAY EITHER BE RESISTANCE WELDED OR ARC WELDED. IN EITHER CASE THE GRATE SHALL BE TRUE AND FLUSH.
11. GRATE B WILL BE USED ONLY WHEN SPECIFIED.
12. NOT TO SCALE.

ORIGINAL STORED AT: ITD, Headquarters 3311 West State Boise, Idaho

ORIGINAL SIGNED BY: TED E. MASON
DATE ORIGINAL SIGNED: NOVEMBER 3, 2008

REVISIONS

NO.	DATE	BY	NO.	DATE	BY	NO.	DATE	BY
1	10-80		6	09-94	MSM	11	11-08	JRV
2	04-82		7	06-97	MSM			
3	03-84		8	06-01	MSM			
4	01-89	GB	9	11-04	MSM			
5	12-93	MSM	10	05-07	MSM			

SCALES SHOWN ARE FOR 11" X 17" PRINTS ONLY

CADD FILE NAME: e6a_1108.dgn

DRAWING DATE: JULY, 1961

IDAHO TRANSPORTATION DEPARTMENT

BOISE IDAHO

ORIGINAL SIGNED BY: LOREN THOMAS
ASSISTANT CHIEF ENGINEER (DEVELOPMENT)
ORIGINAL SIGNED BY: TOM COLE
CHIEF ENGINEER

STANDARD DRAWING

INLETS & CATCH BASINS TYPES 1, 2, & 3

REQUIRES SHEET 2 OF 2

English

STANDARD DRAWING NO.

E-6-A

SHEET 1 OF 2

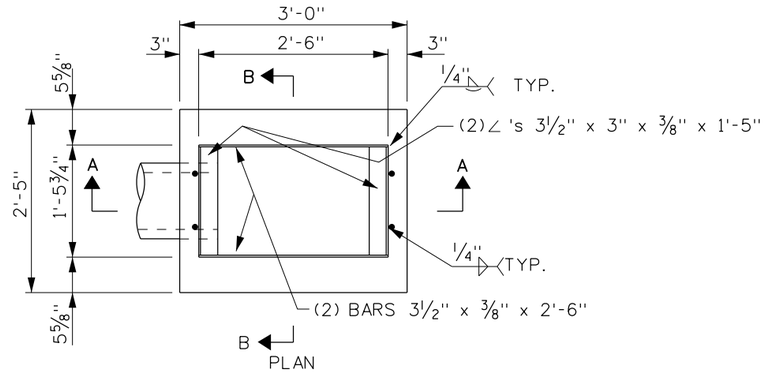

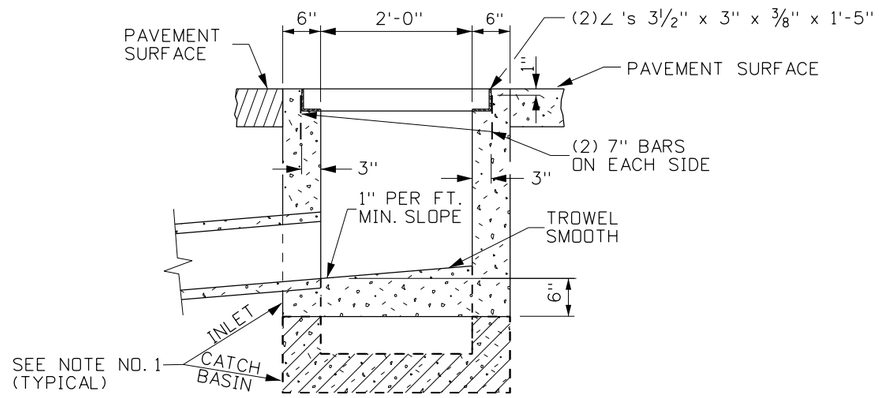

SECTION A-A

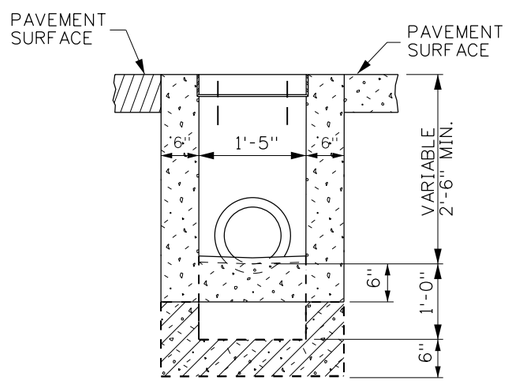

SECTION B-B

INLET - TYPE 3

CATCH BASIN - TYPE 3

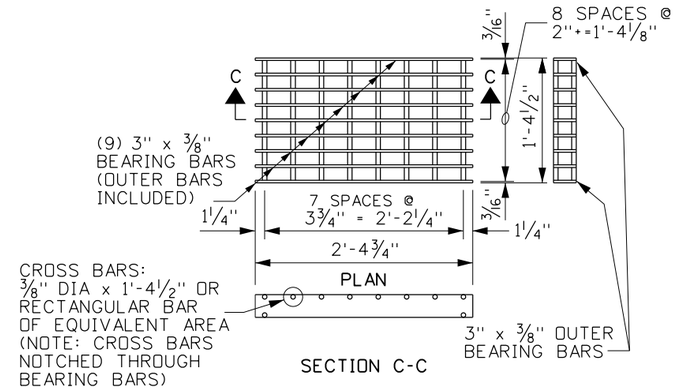

SECTION C-C

GRATE A (STEEL)

(WEIGHT: APPROXIMATELY 88 LBS., SEE NOTE 9 & 10)

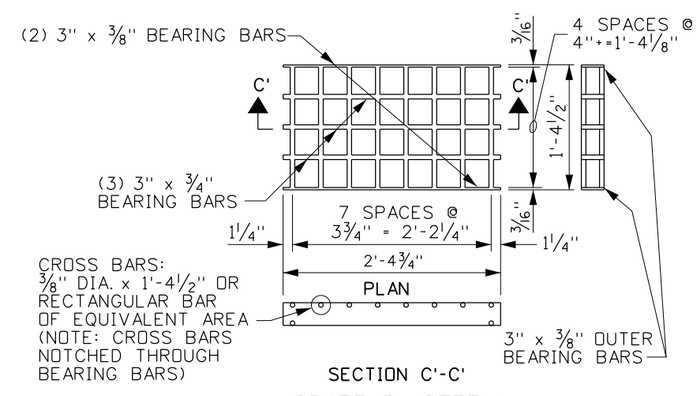

SECTION C'-C'

GRATE B (STEEL)

(WEIGHT: APPROXIMATELY 79 LBS., SEE NOTE 9 & 10)

ORIGINAL STORED AT: ITD, Headquarters 3311 West State Boise, Idaho

ORIGINAL SIGNED BY: TED E. MASON DATE ORIGINAL SIGNED: NOVEMBER 3, 2008

REVISIONS								
NO.	DATE	BY	NO.	DATE	BY	NO.	DATE	BY
1	10-80		6	09-94	MSM	11	11-08	JRV
2	04-82		7	06-97	MSM			
3	03-84		8	06-01	MSM			
4	01-89	GB	9	11-04	MSM			
5	12-93	MSM	10	05-07	MSM			

SCALES SHOWN ARE FOR 11" X 17" PRINTS ONLY

CADD FILE NAME: e6a_1108.dgn

DRAWING DATE: JULY, 1961

IDAHO TRANSPORTATION DEPARTMENT

BOISE IDAHO

ORIGINAL SIGNED BY: LOREN THOMAS
ASSISTANT CHIEF ENGINEER (DEVELOPMENT)
ORIGINAL SIGNED BY: TOM COLE
CHIEF ENGINEER

STANDARD DRAWING

INLETS & CATCH BASINS TYPES 1, 2, & 3

REQUIRES SHEET 1 OF 2

English

STANDARD DRAWING NO.

E-6-A

SHEET 2 OF 2

SYMBOL LEGEND

1.0% TO 2.0% SLOPE

5.0% TO 8.3% RUNNING SLOPE, 2.0% OR FLATTER CROSS SLOPE

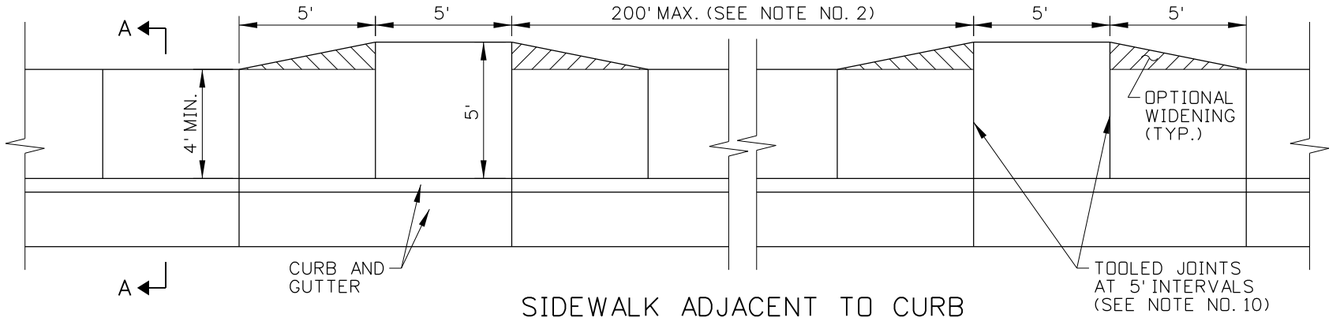

SIDEWALK ADJACENT TO CURB

SEE NOTE NO. 9

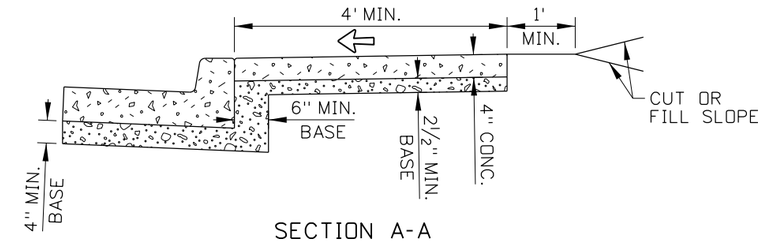

SECTION A-A

SEE NOTE NO. 9

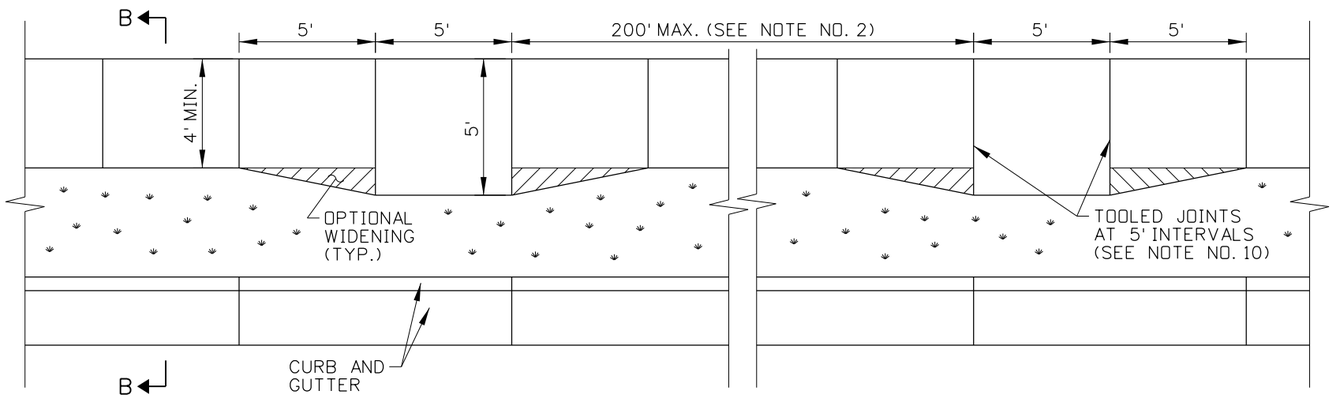

DETACHED SIDEWALK

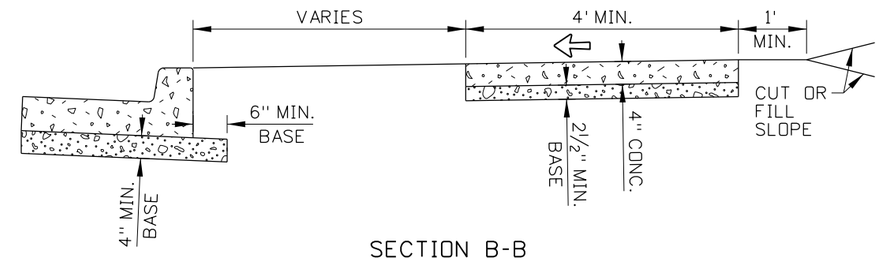

SECTION B-B

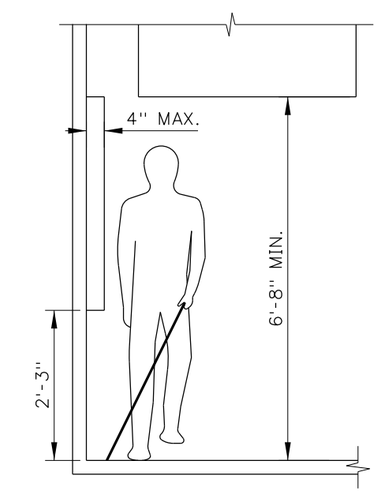

PROTRUDING OBJECT DETAIL

SEE NOTE NO. 7

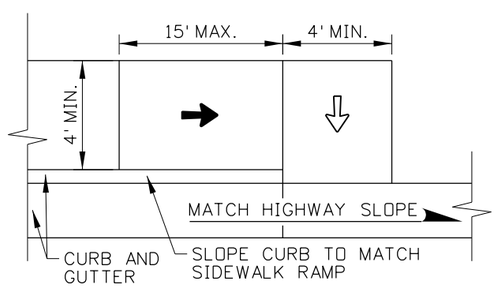

SIDEWALK TERMINATION DETAIL

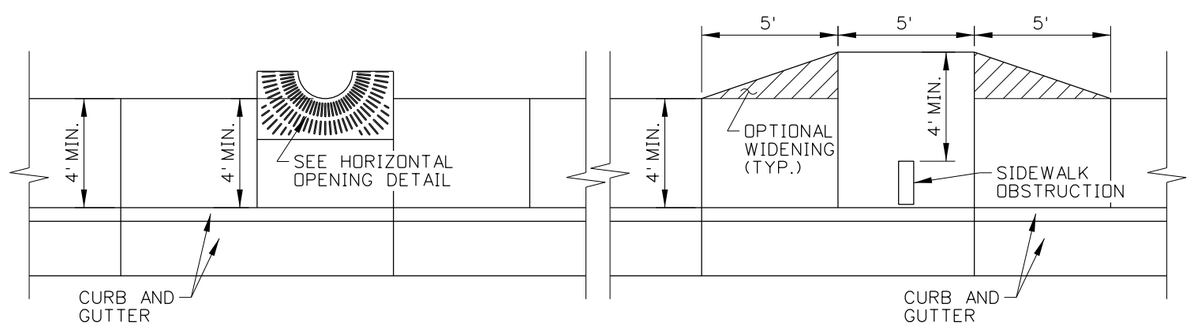

WIDENING AROUND OBSTRUCTIONS DETAIL

SEE NOTE NOS. 6 & 7

ORIGINAL STORED AT: ITD, Headquarters 3311 West State Boise, Idaho

PROFESSIONAL ENGINEER LICENSED RYAN D. LANCASTER 13683 STATE OF IDAHO

ORIGINAL SIGNED BY RYAN D. LANCASTER STATE OF IDAHO JUNE 15, 2015

REVISIONS								
NO.	DATE	BY	NO.	DATE	BY	NO.	DATE	BY

SCALES SHOWN ARE FOR 11" X 17" PRINTS ONLY

CADD FILE NAME: 614-1_0615.dgn

DRAWING DATE: MAY, 2015

IDAHO TRANSPORTATION DEPARTMENT

BOISE IDAHO

ORIGINAL SIGNED BY: KEVIN SABLAN

DESIGN/TRAFFIC SERVICES ENGINEER

STANDARD DRAWING

SIDEWALKS

English

STANDARD DRAWING NO. 614-1

SHEET 1 OF 2

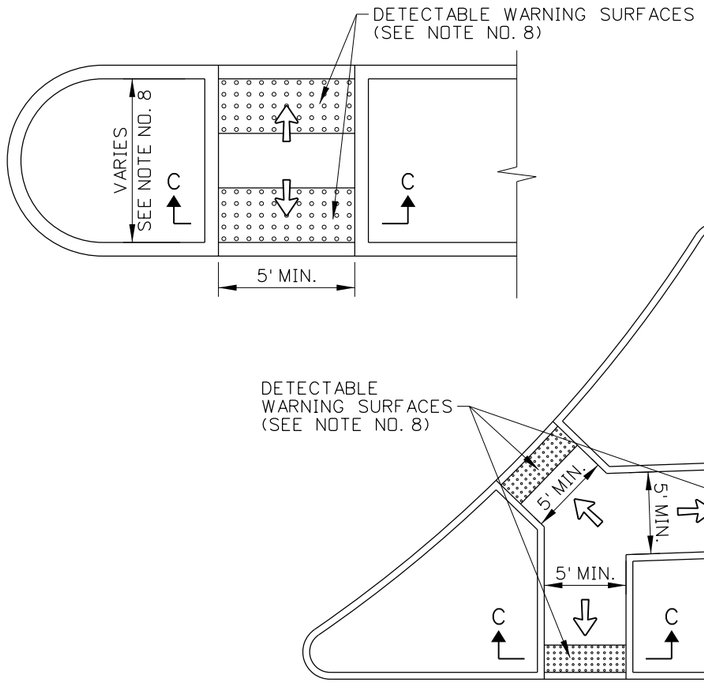

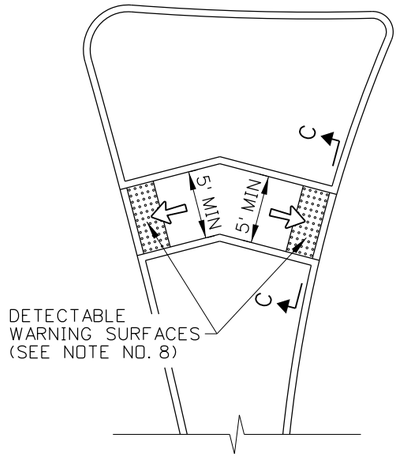

PEDESTRIAN REFUGE ISLAND DETAILS

SYMBOL LEGEND

1.0% TO 2.0% SLOPE

5.0% TO 8.3% RUNNING SLOPE,
2.0% OR FLATTER CROSS SLOPE

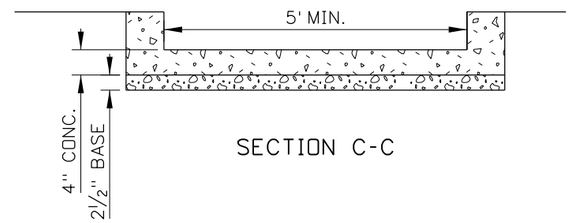

SECTION C-C

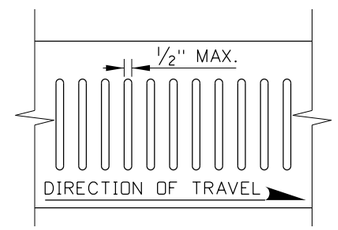

HORIZONTAL OPENING DETAIL

SEE NOTE NO. 6

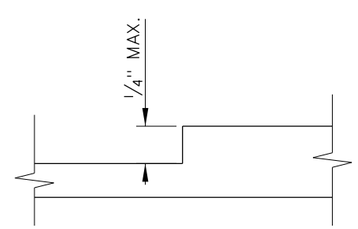

VERTICAL DISCONTINUITY OF ¼" OR LESS

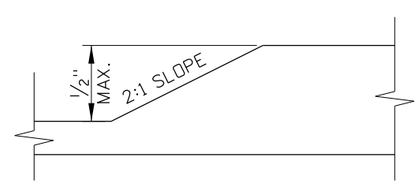

VERTICAL DISCONTINUITY BETWEEN ¼" AND ½"

VERTICAL SURFACE DISCONTINUITY DETAIL

SEE NOTE NO. 5

NOTES

1. SIDEWALKS MAY CONSIST OF A PEDESTRIAN CIRCULATION PATH AND A PEDESTRIAN ACCESS ROUTE. THE PEDESTRIAN CIRCULATION PATH IS A PREPARED SURFACE PROVIDED FOR PEDESTRIAN TRAVEL IN THE PUBLIC RIGHT-OF-WAY. THE PEDESTRIAN ACCESS ROUTE IS A CONTINUOUS AND UNOBSTRUCTED PATH OF TRAVEL PROVIDED FOR PEDESTRIANS WITH DISABILITIES WITHIN OR COINCIDING WITH A PEDESTRIAN CIRCULATION PATH.
2. PROVIDE AT LEAST 4' OF CONTINUOUS CLEAR WIDTH OF PEDESTRIAN ACCESS ROUTE, EXCLUSIVE OF THE CURB WIDTH. WHERE SIDEWALKS ARE WIDER THAN 4', ONLY A PORTION OF THE SIDEWALK IS REQUIRED TO BE PART OF THE PEDESTRIAN ACCESS ROUTE.

   PROVIDE A PASSING SPACE AT 200' OR SHORTER INTERVALS WHEN THE CLEAR WIDTH OF THE PEDESTRIAN ACCESS ROUTE IS LESS THAN 5'. ENSURE THAT THE DIMENSIONS OF THE PASSING SPACE ARE AT LEAST 5' BY 5'. INTERSECTING SIDEWALKS, DRIVEWAYS, AND ALLEYS MAY BE USED AS PASSING SPACES.
3. ENSURE THAT THE GRADE OF THE PEDESTRIAN ACCESS ROUTE DOES NOT EXCEED THE GENERAL GRADE ESTABLISHED FOR THE ADJACENT HIGHWAY.
4. ENSURE THAT THE CROSS SLOPE OF THE PEDESTRIAN ACCESS ROUTE WITHIN THE SIDEWALK DOES NOT EXCEED TWO PERCENT.
5. VERTICAL SURFACE DISCONTINUITIES MAY OCCASIONALLY OCCUR AT EXPANSION JOINTS, UTILITY COVERS, VAULT FRAMES, AND GRATINGS WITHIN THE SIDEWALK. ENSURE THAT VERTICAL SURFACE DISCONTINUITIES DO NOT EXCEED ½". BEVEL VERTICAL SURFACE DISCONTINUITIES BETWEEN ¼" AND ½" WITH A 2:1 SLOPE ACROSS THE ENTIRE VERTICAL SURFACE DISCONTINUITY.
6. ENSURE THAT HORIZONTAL OPENINGS IN GRATINGS AND JOINTS DO NOT PERMIT PASSAGE OF A SPHERE MORE THAN ½" IN DIAMETER.
7. OBJECTS PROTRUDING INTO OR OVERHANGING A PEDESTRIAN CIRCULATION PATH MUST NOT REDUCE THE MINIMUM CLEAR WIDTH OF THE PEDESTRIAN ACCESS ROUTE. PROTRUDING OBJECTS INCLUDE STREET FURNITURE, STREET LIGHTS, UTILITY POLES, EQUIPMENT CABINETS, SIGN POSTS AND SIGNS, PARKING METERS, TRASH RECEPTACLES, PUBLIC TELEPHONES, MAILBOXES, NEWSPAPER VENDING MACHINES, BENCHES, TRANSIT SHELTERS, KIOSKS, BICYCLE RACKS, PLANTERS AND PLANTED TREES, AND STREET SCULPTURES.

   ENSURE THAT OBJECTS WITH LEADING EDGES BETWEEN 2'-3" AND 6'-8" ABOVE THE FINISH SURFACE DO NOT PROTRUDE MORE THAN 4" HORIZONTALLY INTO THE PEDESTRIAN CIRCULATION PATH.
8. PROVIDE DETECTABLE WARNING SURFACES ON PEDESTRIAN REFUGE ISLANDS WITH CURB RAMPS OR WHEN CUT-THROUGH AT STREET LEVEL AND REFUGE ISLAND WIDTHS ARE GREATER THAN SIX FEET IN THE DIRECTION OF PEDESTRIAN TRAVEL. DO NOT INSTALL DETECTABLE WARNING SURFACES AT PEDESTRIAN REFUGE ISLANDS THAT ARE CUT-THROUGH AT STREET LEVEL AND ARE LESS THAN SIX FEET IN WIDTH IN THE DIRECTION OF PEDESTRIAN TRAVEL. SEE STANDARD DRAWING 614-3 FOR DETECTABLE WARNING SURFACE DETAILS.
9. USE A BOND PREVENTATIVE BETWEEN THE SIDEWALK AND CURB WHEN CONSTRUCTED SEPARATELY AND PLACED ADJACENT TO EACH OTHER.
10. ALIGN CURB AND SIDEWALK JOINTS. CONSTRUCT JOINTS AT 5' INTERVALS THAT ARE APPROXIMATELY ⅛" WIDE AND ¾" IN DEPTH. CONSTRUCT A LONGITUDINAL JOINT WHEN THE SIDEWALK IS 8' WIDE OR WIDER. INSTALL A PREFORMED EXPANSION JOINT FILLER EVERY 40'.
11. DRAWING NOT TO SCALE.

ORIGINAL STORED AT: ITD, Headquarters 3311 West State Boise, Idaho

PROFESSIONAL ENGINEER LICENSED RYAN D. LANCASTER STATE OF IDAHO 13683 ORIGINAL SIGNED JUNE 15, 2015 RYAN D. LANCASTER

REVISIONS								
NO.	DATE	BY	NO.	DATE	BY	NO.	DATE	BY

SCALES SHOWN ARE FOR 11" X 17" PRINTS ONLY

CADD FILE NAME: 614-1_0615.dgn

DRAWING DATE: MAY, 2015

IDAHO TRANSPORTATION DEPARTMENT

BOISE IDAHO

ORIGINAL SIGNED BY: KEVIN SABLAN

DESIGN/TRAFFIC SERVICES ENGINEER

STANDARD DRAWING

SIDEWALKS

English

STANDARD DRAWING NO. 614-1

SHEET 2 OF 2

SYMBOL LEGEND

- 1.0% TO 2.0% SLOPE
- 5.0% TO 8.3% RUNNING SLOPE, 2.0% OR FLATTER CROSS SLOPE
- 10.0% OR FLATTER SLOPE

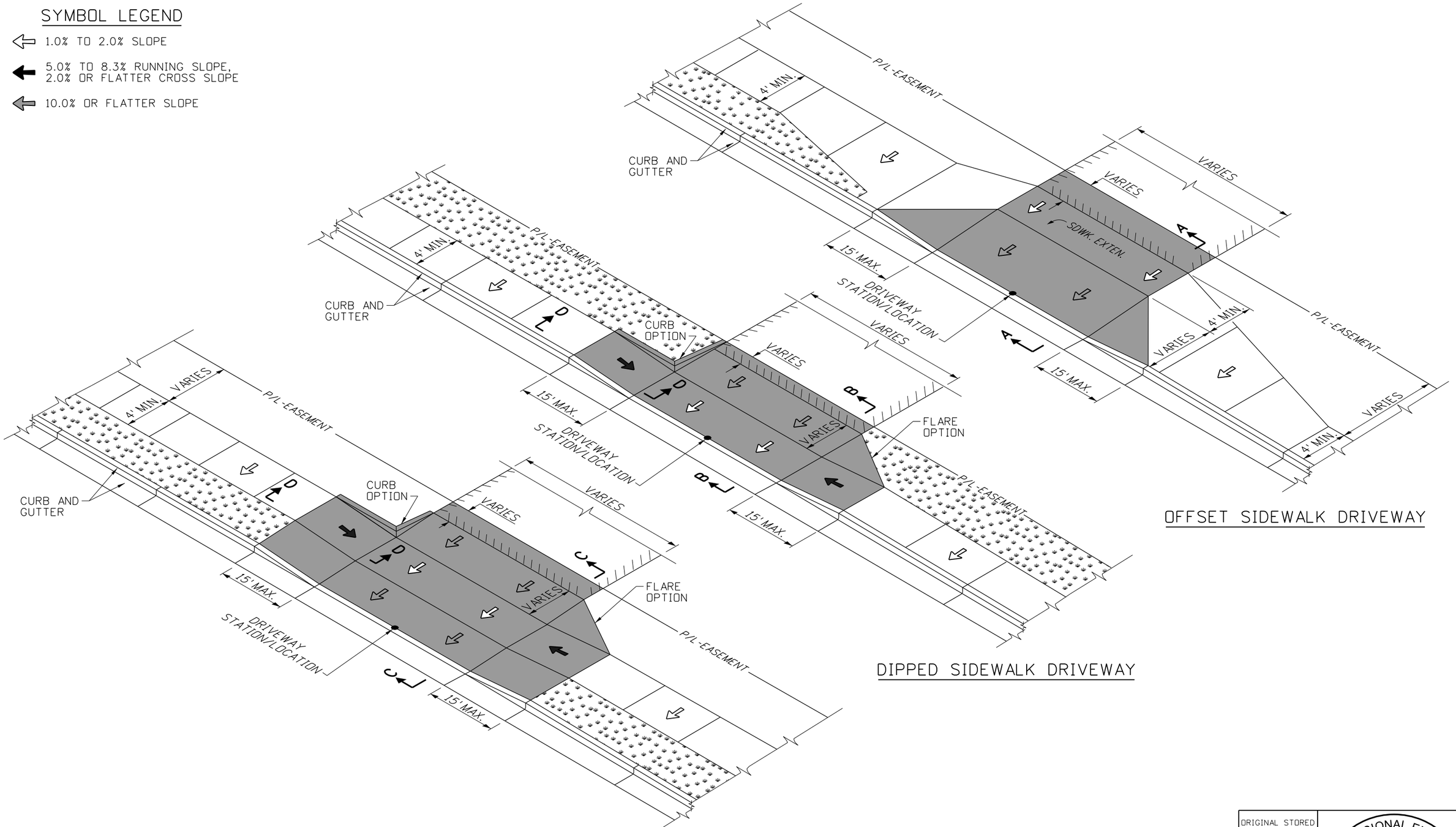

OFFSET SIDEWALK DRIVEWAY

DIPPED SIDEWALK DRIVEWAY

COMBINATION DRIVEWAY

REVISIONS								
NO.	DATE	BY	NO.	DATE	BY	NO.	DATE	BY
1	11-90	GB	6	05-06	MSM			
2	09-93	MSM	7	05-07	MSM			
3	12-94	MSM	8	07-10	JAW			
4	09-02	MSM	9	04-15	EG			
5	06-04	MSM						

SCALES SHOWN ARE FOR 11" X 17" PRINTS ONLY

CADD FILE NAME: 614-2_0615.dgn

DRAWING DATE: APRIL, 1990

IDAHO TRANSPORTATION DEPARTMENT

BOISE IDAHO

ORIGINAL SIGNED BY: KEVIN SABLAN

DESIGN/TRAFFIC SERVICES ENGINEER

STANDARD DRAWING

DRIVEWAYS

English

STANDARD DRAWING NO.

614-2

SHEET 1 OF 2

ORIGINAL STORED AT: ITD, Headquarters 3311 West State Boise, Idaho

PROFESSIONAL ENGINEER LICENSED 13683 RYAN D. LANCASTER STATE OF IDAHO

ORIGINAL SIGNED BY RYAN D. LANCASTER DATE ORIGINAL SIGNED JUNE 15, 2015

SYMBOL LEGEND

- 1.0% TO 2.0% SLOPE
- 5.0% TO 8.3% RUNNING SLOPE, 2.0% OR FLATTER CROSS SLOPE
- 10.0% OR FLATTER SLOPE

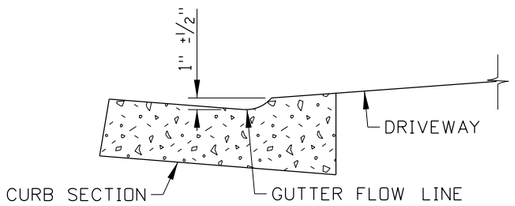

CURB CUT DETAIL

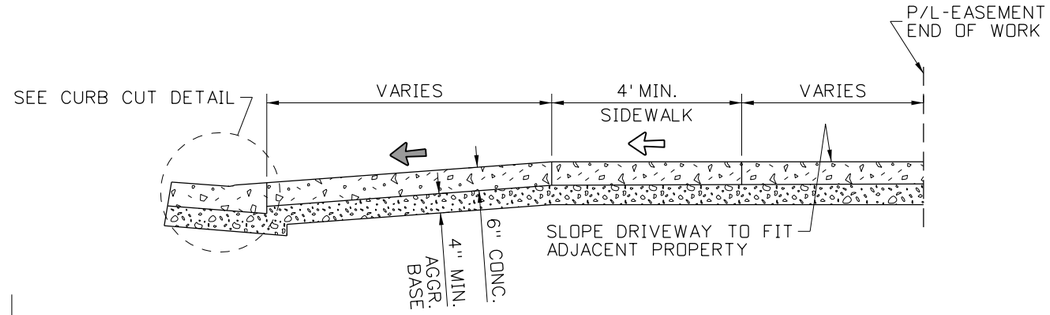

SECTION A-A

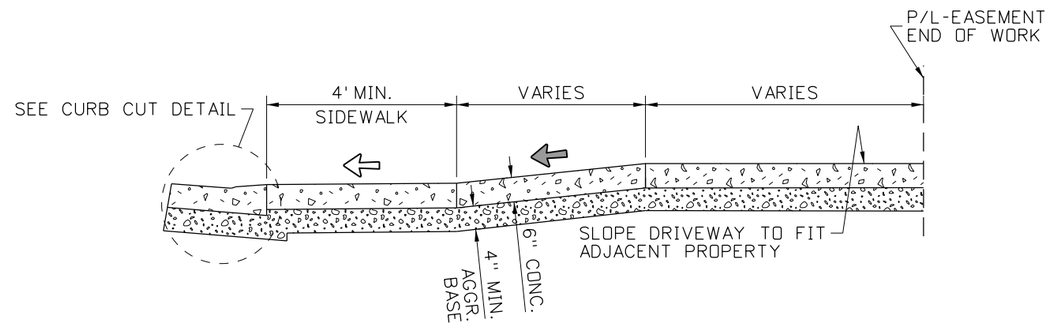

SECTION B-B

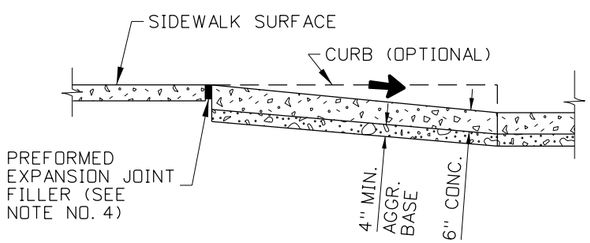

SECTION D-D

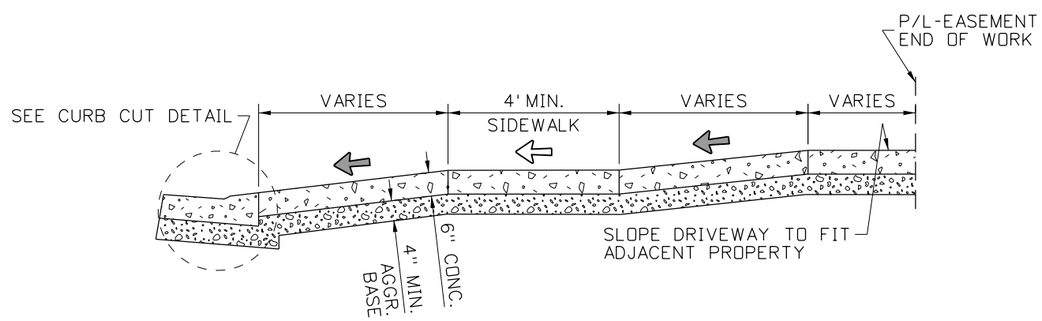

SECTION C-C

NOTES

1. EXTENTS OF DRIVEWAY PAY ITEMS ARE SHOWN IN GRAY SHADING.
2. SEE THE SIDEWALKS STANDARD DRAWING FOR NOTES RELATED TO THE PEDESTRIAN ACCESS ROUTE.
3. DO NOT PLACE DETECTABLE WARNING SURFACES ON DRIVEWAYS.
4. USE A BOND PREVENTATIVE BETWEEN THE DRIVEWAY OR SIDEWALK AND CURB WHEN CONSTRUCTED SEPARATELY AND PLACED ADJACENT TO EACH OTHER.
5. ALIGN ALTERNATING CURB AND SIDEWALK JOINTS. CONSTRUCT DRIVEWAY AND SIDEWALK JOINTS AT 5' INTERVALS THAT ARE APPROXIMATELY 1/8" WIDE AND 3/4" IN DEPTH.
6. DRAWING NOT TO SCALE.

ORIGINAL STORED AT: ITD, Headquarters 3311 West State Boise, Idaho

PROFESSIONAL ENGINEER LICENSED 13683 STATE OF IDAHO RYAN D. LANCASTER ORIGINAL SIGNED BY RYAN D. LANCASTER ON JUNE 15, 2015

REVISIONS								
NO.	DATE	BY	NO.	DATE	BY	NO.	DATE	BY
1	11-90	GB	6	05-06	MSM			
2	09-93	MSM	7	05-07	MSM			
3	12-94	MSM	8	07-10	JAW			
4	09-02	MSM	9	04-15	EG			
5	06-04	MSM						

SCALES SHOWN ARE FOR 11" X 17" PRINTS ONLY

CADD FILE NAME: 614-2_0615.dgn

DRAWING DATE: APRIL, 1990

IDAHO TRANSPORTATION DEPARTMENT

BOISE IDAHO

ORIGINAL SIGNED BY: KEVIN SABLAN

DESIGN/TRAFFIC SERVICES ENGINEER

STANDARD DRAWING

DRIVEWAYS

English

STANDARD DRAWING NO.

614-2

SHEET 2 OF 2

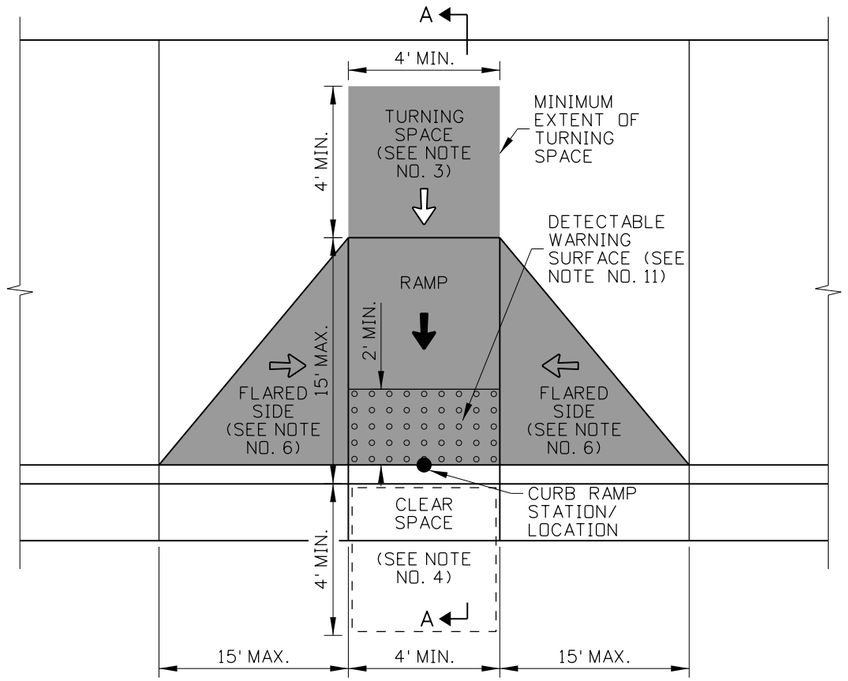

PERPENDICULAR CURB RAMP

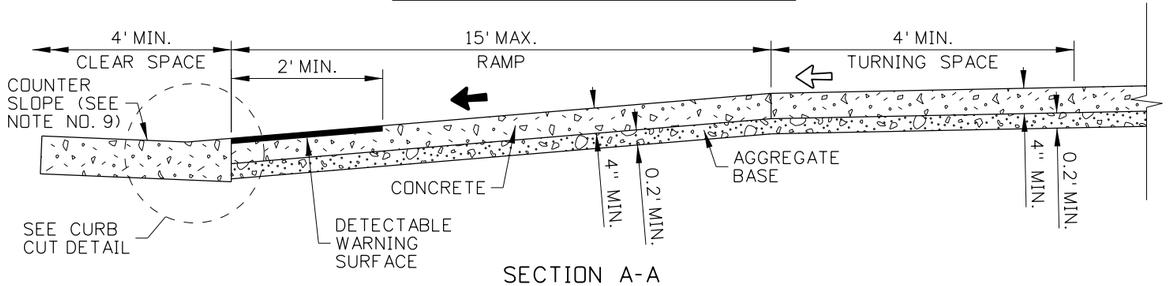

SECTION A-A

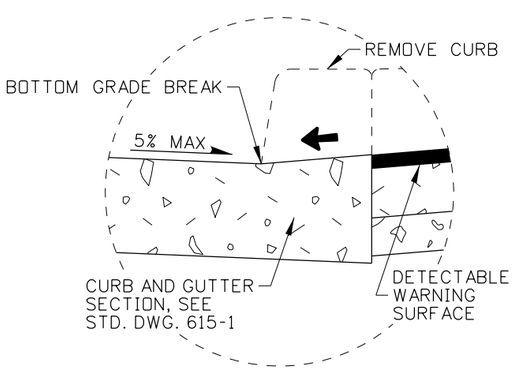

CURB CUT DETAIL

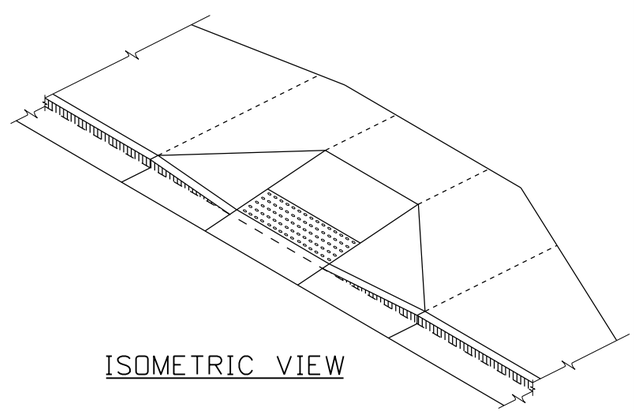

ISOMETRIC VIEW

SYMBOL LEGEND

- 1.0% TO 2.0% SLOPE
- 5.0% TO 8.3% RUNNING SLOPE, 2.0% OR FLATTER CROSS SLOPE
- 10.0% OR FLATTER SLOPE

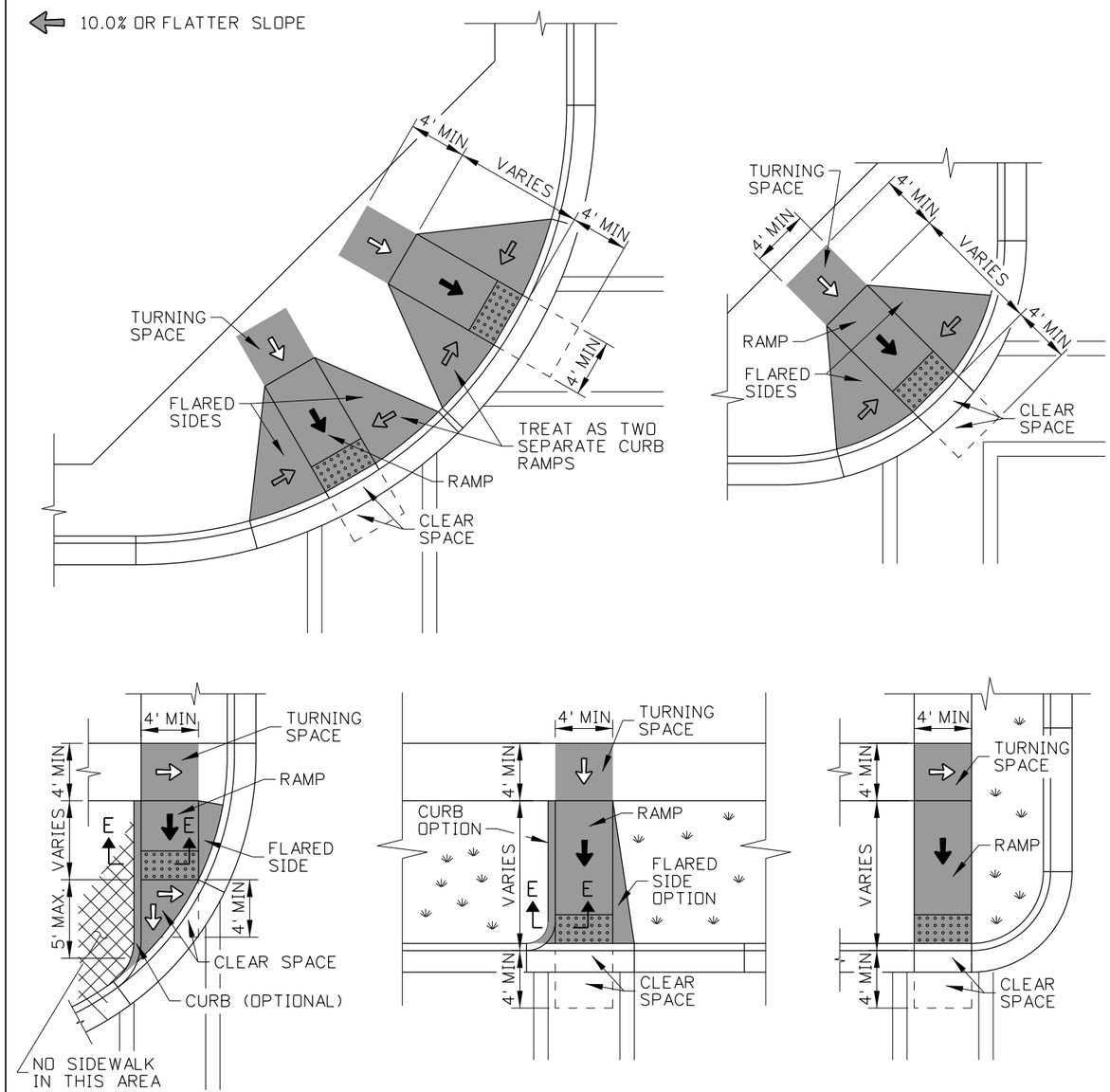

EXAMPLE APPLICATIONS

ORIGINAL STORED AT: ITD, Headquarters 3311 West State Boise, Idaho

PROFESSIONAL ENGINEER LICENSED 13683 RYAN D. LANCASTER STATE OF IDAHO

ORIGINAL SIGNED BY: RYAN D. LANCASTER ORIGINAL SIGNED DATE: JUNE 15, 2015

REVISIONS								
NO.	DATE	BY	NO.	DATE	BY	NO.	DATE	BY
1	09-93	MSM	6	07-03	MSM	11	07-10	JAW
2	12-95	MSM	7	12-04	MSM	12	09-11	TEM
3	06-98	MSM	8	06-05	MSM	13	05-15	RDL
4	08-01	MSM	9	05-06	MSM			
5	10-02	MSM	10	05-07	MSM			

SCALES SHOWN ARE FOR 11" X 17" PRINTS ONLY

CADD FILE NAME: 614-3_0615.dgn

DRAWING DATE: JUNE, 1990

IDAHO TRANSPORTATION DEPARTMENT

BOISE IDAHO

ORIGINAL SIGNED BY: KEVIN SABLAN

DESIGN/TRAFFIC SERVICES ENGINEER

STANDARD DRAWING

CURB RAMPS

English

STANDARD DRAWING NO.

614-3

SHEET 1 OF 4

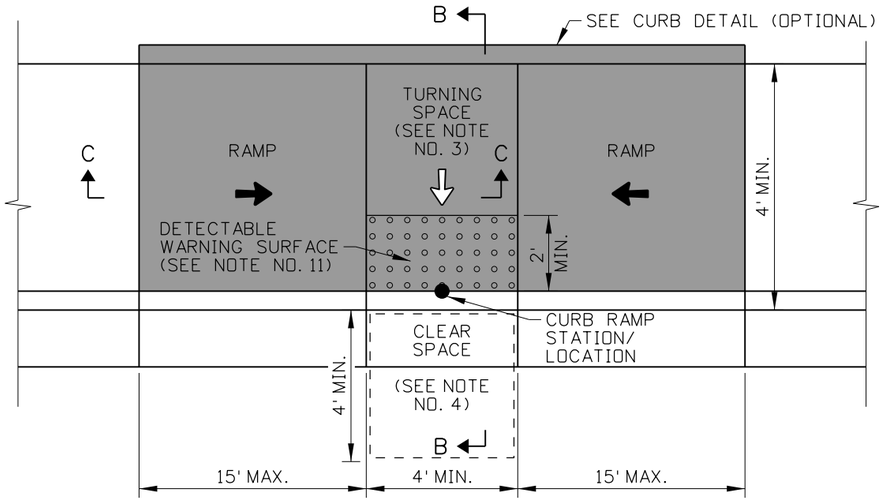

PARALLEL CURB RAMP

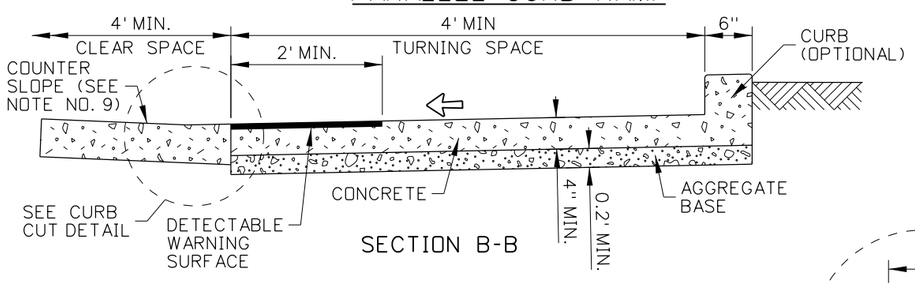

SECTION B-B

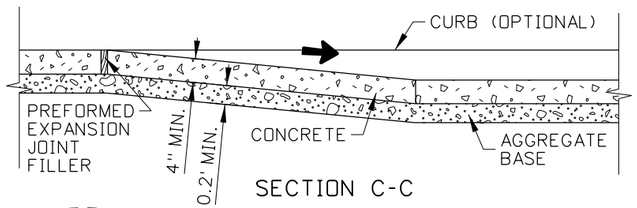

SECTION C-C

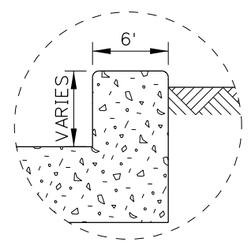

CURB DETAIL

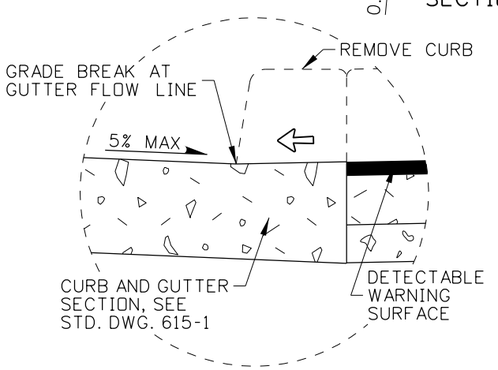

CURB CUT DETAIL

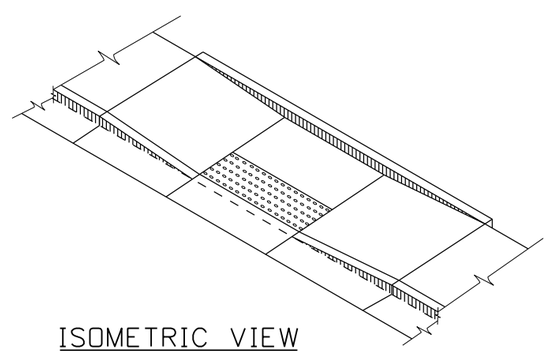

ISOMETRIC VIEW

SYMBOL LEGEND

- 1.0% TO 2.0% SLOPE
- 5.0% TO 8.3% RUNNING SLOPE, 2.0% OR FLATTER CROSS SLOPE
- 10.0% OR FLATTER SLOPE

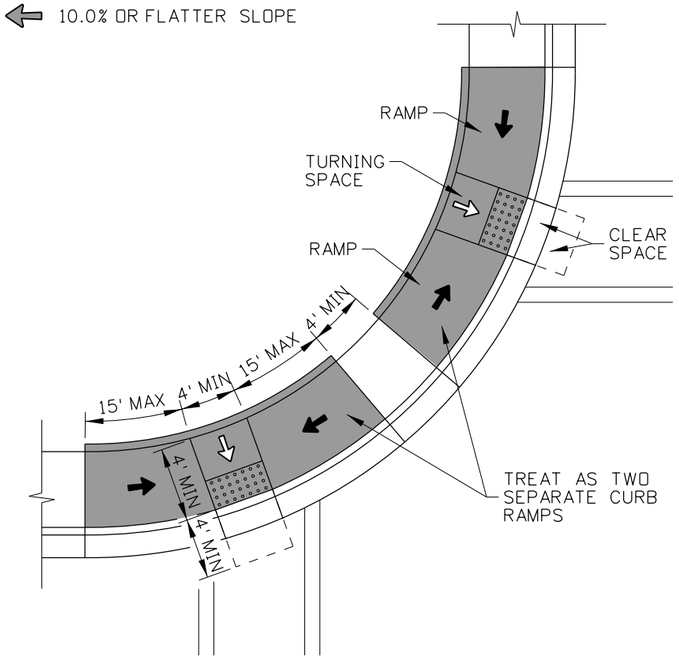

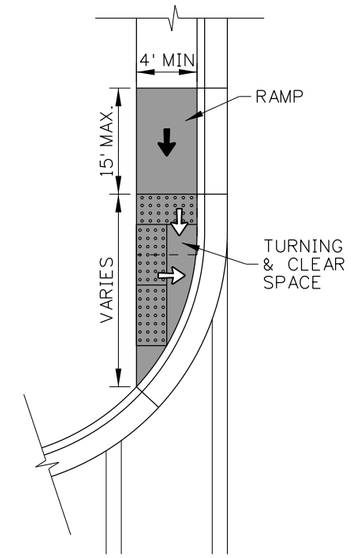

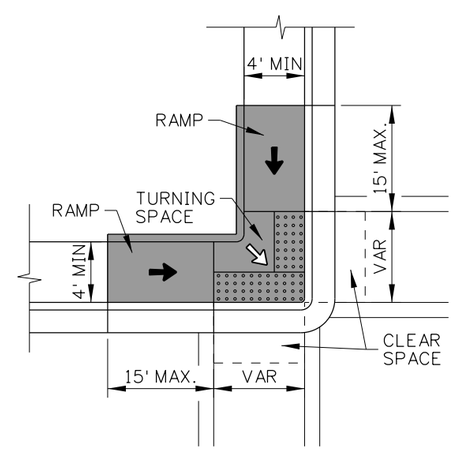

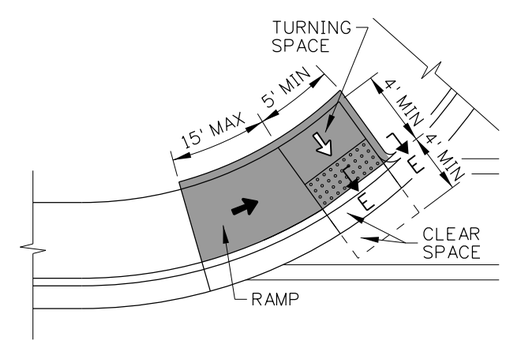

EXAMPLE APPLICATIONS

ORIGINAL STORED AT: ITD, Headquarters 3311 West State Boise, Idaho

PROFESSIONAL ENGINEER LICENSED ORIGINAL SIGNED RYAN D. LANCASTER DATE ORIGINAL SIGNED JUNE 15, 2015 13683 STATE OF IDAHO RYAN D. LANCASTER

REVISIONS								
NO.	DATE	BY	NO.	DATE	BY	NO.	DATE	BY
1	09-93	MSM	6	07-03	MSM	11	07-10	JAW
2	12-95	MSM	7	12-04	MSM	12	09-11	TEM
3	06-98	MSM	8	06-05	MSM	13	05-15	RDL
4	08-01	MSM	9	05-06	MSM			
5	10-02	MSM	10	05-07	MSM			

SCALES SHOWN ARE FOR 11" X 17" PRINTS ONLY

CADD FILE NAME: 614-3_0615.dgn

DRAWING DATE: JUNE, 1990

IDAHO TRANSPORTATION DEPARTMENT

BOISE IDAHO

ORIGINAL SIGNED BY: KEVIN SABLAN

DESIGN/TRAFFIC SERVICES ENGINEER

STANDARD DRAWING

CURB RAMPS

English

STANDARD DRAWING NO.

614-3

SHEET 2 OF 4

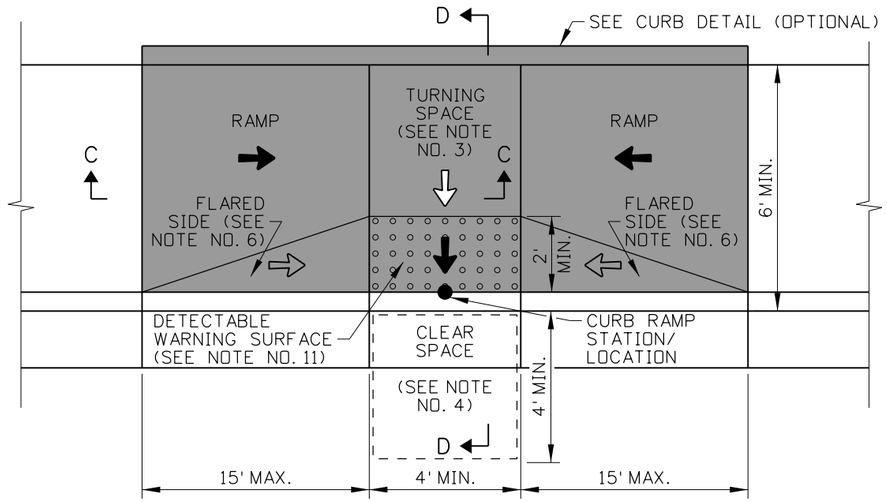

COMBINATION CURB RAMP

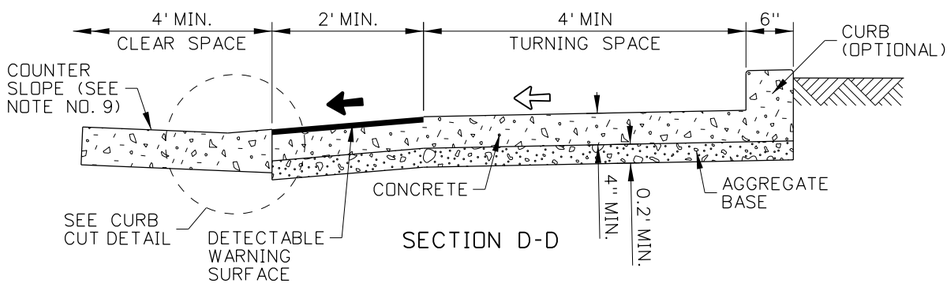

SECTION D-D

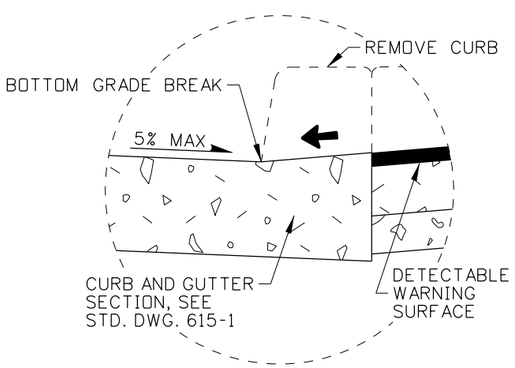

CURB CUT DETAIL

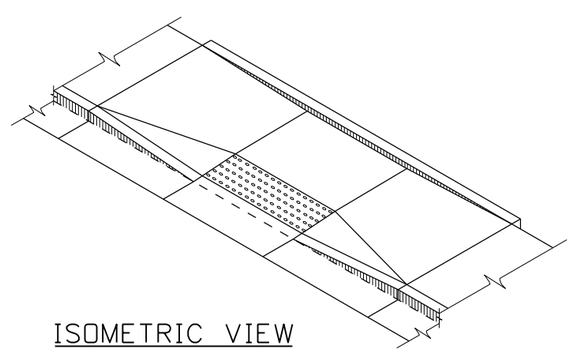

ISOMETRIC VIEW

SYMBOL LEGEND

- 1.0% TO 2.0% SLOPE
- 5.0% TO 8.3% RUNNING SLOPE, 2.0% OR FLATTER CROSS SLOPE
- 10.0% OR FLATTER SLOPE

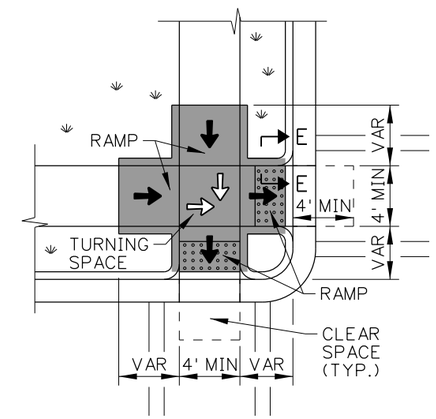

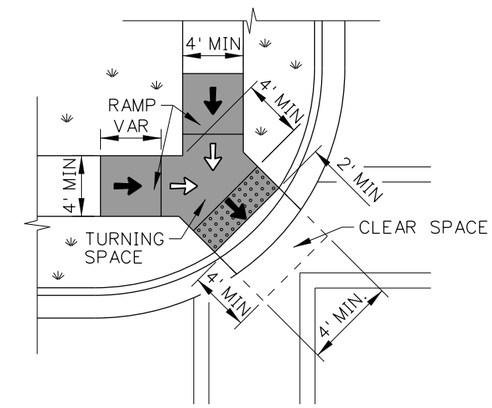

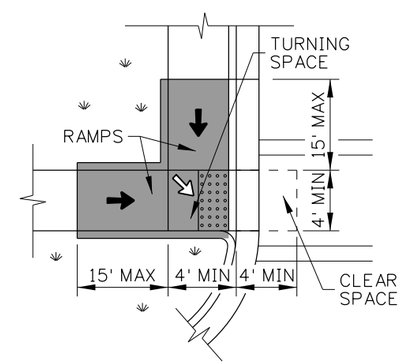

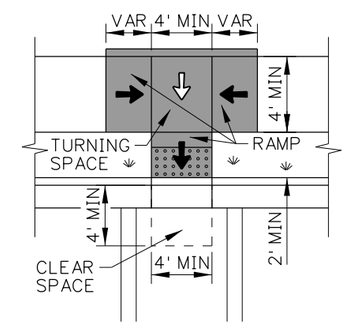

EXAMPLE APPLICATIONS

ORIGINAL STORED AT: ITD, Headquarters 3311 West State Boise, Idaho

PROFESSIONAL ENGINEER LICENSED 13683 STATE OF IDAHO RYAN D. LANCASTER ORIGINAL SIGNED BY RYAN D. LANCASTER ON JUNE 15, 2015

REVISIONS								
NO.	DATE	BY	NO.	DATE	BY	NO.	DATE	BY
1	09-93	MSM	6	07-03	MSM	11	07-10	JAW
2	12-95	MSM	7	12-04	MSM	12	09-11	TEM
3	06-98	MSM	8	06-05	MSM	13	05-15	RDL
4	08-01	MSM	9	05-06	MSM			
5	10-02	MSM	10	05-07	MSM			

SCALES SHOWN ARE FOR 11" X 17" PRINTS ONLY

CADD FILE NAME: 614-3_0615.dgn

DRAWING DATE: JUNE, 1990

IDAHO TRANSPORTATION DEPARTMENT

BOISE IDAHO

ORIGINAL SIGNED BY: KEVIN SABLAN

DESIGN/TRAFFIC SERVICES ENGINEER

STANDARD DRAWING

CURB RAMPS

English

STANDARD DRAWING NO. 614-3

SHEET 3 OF 4

SYMBOL LEGEND

- 1.0% TO 2.0% SLOPE
- 5.0% TO 8.3% RUNNING SLOPE, 2.0% OR FLATTER CROSS SLOPE
- 10.0% OR FLATTER SLOPE

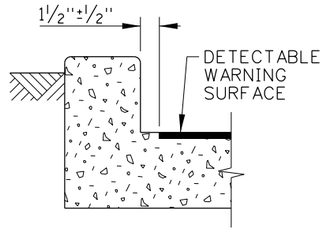

SECTION E-E

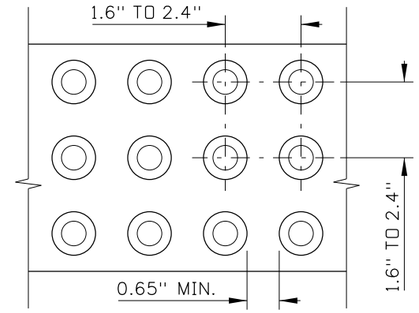

DOME SPACING

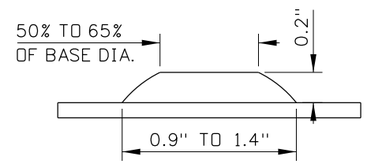

DOME SIZE

DETECTABLE WARNING SURFACE DETAILS

SEE NOTE NO. 11

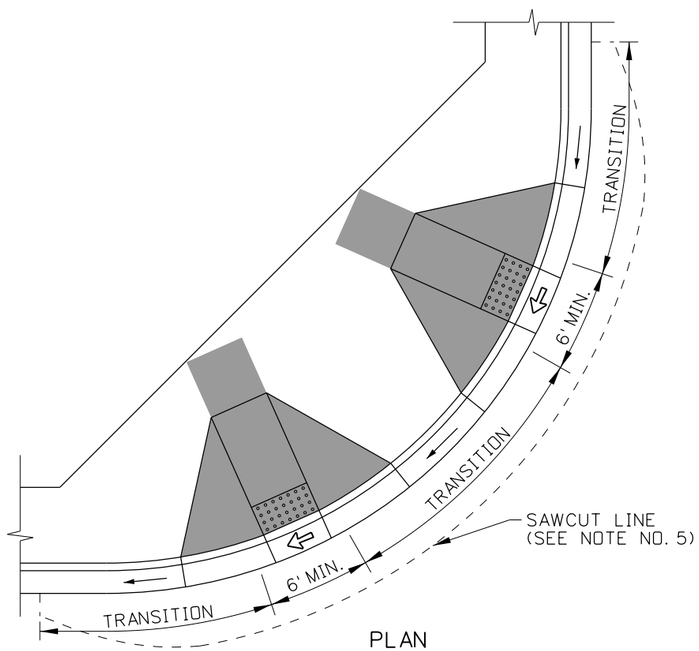

PLAN

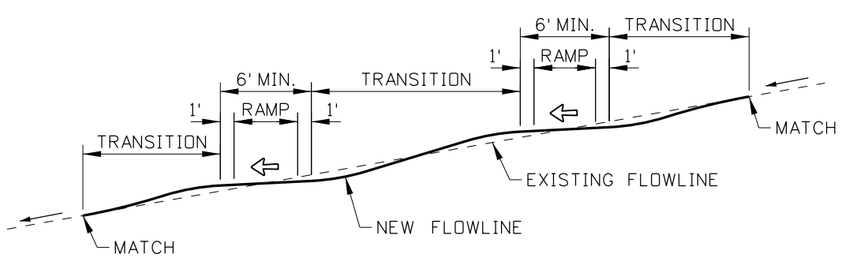

PROFILE

FLOWLINE PROFILE DETAIL

SEE NOTE NO. 5

NOTES

1. EXTENTS OF CURB RAMP PAY ITEMS ARE SHOWN IN GRAY SHADING.
2. CURB RAMPS CAN BE PERPENDICULAR, PARALLEL, OR A COMBINATION OF PARALLEL AND PERPENDICULAR RAMPS. EXAMPLE APPLICATIONS OF EACH ARE SHOWN ON SHEETS 1, 2, AND 3.

   PERPENDICULAR CURB RAMPS HAVE A RAMP THAT CUTS THROUGH THE CURB AT RIGHT ANGLES OR MEETS THE GUTTER GRADE BREAK AT RIGHT ANGLES WHEN THE CURB IS CURVED.

   PARALLEL CURB RAMPS HAVE A RAMP OR RAMPS IN-LINE WITH THE DIRECTION OF SIDEWALK TRAVEL AND LOWER THE SIDEWALK TO A LEVEL TURNING SPACE WHERE A TURN IS MADE TO ENTER THE PEDESTRIAN STREET CROSSING.

   COMBINATION CURB RAMPS HAVE FEATURES FROM PERPENDICULAR AND PARALLEL CURB RAMPS.
3. PROVIDE A TURNING SPACE WITH A 2.0% OR FLATTER SLOPE IN EACH DIRECTION. TURNING SPACES MAY OVERLAP WITH OTHER TURNING SPACES AND CLEAR SPACES.

   PERPENDICULAR CURB RAMP:
   PROVIDE A 4' BY 5' MINIMUM TURNING SPACE WHEN THE TURNING SPACE IS CONSTRAINED AT THE BACK-OF-SIDEWALK.

   PARALLEL CURB RAMP:
   PROVIDE A 4' BY 5' TURNING SPACE WHEN THE TURNING SPACE IS CONSTRAINED ON TWO OR MORE SIDES. ENSURE THAT THE 5' DIMENSION IS PROVIDED IN THE DIRECTION OF THE PEDESTRIAN STREET CROSSING.
4. PROVIDE A CLEAR SPACE BEYOND THE BOTTOM OF THE GRADE BREAK THAT IS WITHIN THE WIDTH OF THE PEDESTRIAN STREET CROSSING AND WHOLLY OUTSIDE THE PARALLEL VEHICLE TRAFFIC LANE.
5. CROSS SLOPE IS THE SLOPE PERPENDICULAR TO THE DIRECTION OF PEDESTRIAN TRAVEL. ENSURE THAT THE CROSS SLOPE OF THE RAMP AND TURNING SPACE DOES NOT EXCEED TWO PERCENT. AT PEDESTRIAN STREET CROSSINGS WITHOUT YIELD OR STOP CONTROL AND AT MIDBLOCK PEDESTRIAN STREET CROSSINGS, THE CROSS SLOPE MAY MATCH THE STREET OR HIGHWAY GRADE. FLATTEN THE GUTTER FLOWLINE THROUGH CURB RAMPS TO TWO PERCENT OR FLATTER WHEN NEEDED. WHEN THE PAVEMENT IS SAWCUT TO FLATTEN THE FLOWLINE, VARY THE WIDTH OF THE SAWCUT SO THAT THE PAVEMENT PATCH SMOOTHLY MATCHES THE EXISTING PAVEMENT.
6. PROVIDE FLARED SIDES ON PERPENDICULAR CURB RAMPS, OR COMBINATION CURB RAMPS WHERE A PEDESTRIAN CIRCULATION PATH CROSSES THE CURB RAMP. THE FLARED SIDES ARE PART OF THE PEDESTRIAN CIRCULATION PATH, BUT ARE NOT PART OF THE PEDESTRIAN ACCESS ROUTE. THE SLOPE OF THE FLARED SIDES IS MEASURED PARALLEL TO THE CURB LINE. FLARED SIDES ARE NOT NEEDED OR MAY BE STEEPER WHEN THE PEDESTRIAN CIRCULATION PATH DOES NOT CROSS THE CURB RAMP.
7. THE PEDESTRIAN CIRCULATION PATH IS A PREPARED SURFACE PROVIDED FOR PEDESTRIAN TRAVEL IN THE PUBLIC RIGHT-OF-WAY. THE PEDESTRIAN ACCESS ROUTE IS A CONTINUOUS AND UNOBSTRUCTED PATH OF TRAVEL PROVIDED FOR PEDESTRIANS WITH DISABILITIES WITHIN OR COINCIDING WITH A PEDESTRIAN CIRCULATION PATH.
8. ENSURE THAT GRADE BREAKS ARE PERPENDICULAR TO THE DIRECTION OF THE RAMP RUN AND ARE FLUSH. DO NOT CREATE GRADE BREAKS ON THE SURFACE OF RAMP RUNS AND TURNING SPACES.
9. ENSURE THAT THE COUNTER SLOPE OF THE GUTTER OR STREET AT THE FOOT OF CURB RAMPS RUNS DOES NOT EXCEED FIVE PERCENT.
10. WHERE PRACTICAL, PLACE UTILITY COVERS, VAULT FRAMES, AND GRATINGS OUTSIDE RAMP RUNS, TURNING SPACES, OR GUTTER AREAS. LOCATE CATCH BASINS AND INLETS OUTSIDE OF RAMP RUNS.
11. DETECTABLE WARNING SURFACES CONSIST OF TRUNCATED DOMES ALIGNED IN A SQUARE OR RADIAL GRID PATTERN. PROVIDE DETECTABLE WARNING SURFACES THAT CONTRAST VISUALLY WITH ADJACENT GUTTER, HIGHWAY, OR PEDESTRIAN ACCESS ROUTE SURFACE, EITHER LIGHT-ON-DARK OR DARK-ON-LIGHT. ENSURE THAT THE DETECTABLE WARNING SURFACE EXTENDS THE FULL WIDTH OF THE RAMP RUN (EXCLUDING FLARED SIDES) OR TURNING SPACE.

    PERPENDICULAR AND COMBINATION CURB RAMPS:
    WHERE THE ENDS OF THE BOTTOM GRADE BREAK ARE IN FRONT OF THE BACK OF CURB, PLACE THE DETECTABLE WARNING SURFACE AT THE BACK OF CURB.

    WHERE THE ENDS OF THE BOTTOM GRADE BREAK ARE BEHIND THE BACK OF CURB, PLACE THE DETECTABLE WARNING SURFACE ON THE RAMP RUN WITHIN ONE DOME SPACING OF THE BOTTOM GRADE BREAK AND WITHIN 5' OF THE BACK OF CURB.

    PARALLEL CURB RAMP:
    PLACE DETECTABLE WARNING SURFACE ON THE TURNING SPACE AT THE BACK OF CURB.
12. USE A BOND PREVENTATIVE BETWEEN THE CURB RAMP OR SIDEWALK AND CURB WHEN CONSTRUCTED SEPARATELY AND PLACED ADJACENT TO EACH OTHER.
13. ALIGN ALTERNATING CURB AND SIDEWALK JOINTS. CONSTRUCT JOINTS APPROXIMATELY ⅛" WIDE AND ¾" IN DEPTH.
14. DRAWING NOT TO SCALE.

ORIGINAL STORED AT: ITD, Headquarters 3311 West State Boise, Idaho

PROFESSIONAL ENGINEER LICENSED 13683 RYAN D. LANCASTER STATE OF IDAHO
ORIGINAL SIGNED BY RYAN D. LANCASTER ON JUNE 15, 2015

REVISIONS

NO.	DATE	BY	NO.	DATE	BY	NO.	DATE	BY
1	09-93	MSM	6	07-03	MSM	11	07-10	JAW
2	12-95	MSM	7	12-04	MSM	12	09-11	TEM
3	06-98	MSM	8	06-05	MSM	13	05-15	RDL
4	08-01	MSM	9	05-06	MSM			
5	10-02	MSM	10	05-07	MSM			

SCALES SHOWN ARE FOR 11" X 17" PRINTS ONLY

CADD FILE NAME: 614-3_0615.dgn

DRAWING DATE: JUNE, 1990

IDAHO TRANSPORTATION DEPARTMENT

BOISE IDAHO

ORIGINAL SIGNED BY: KEVIN SABLAN

DESIGN/TRAFFIC SERVICES ENGINEER

STANDARD DRAWING

CURB RAMPS

English

STANDARD DRAWING NO. 614-3

SHEET 4 OF 4

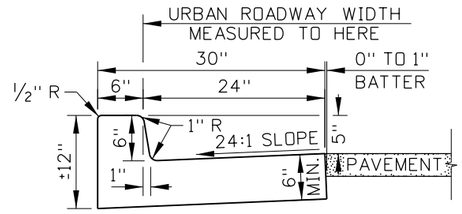

CURB AND GUTTER TYPE 1

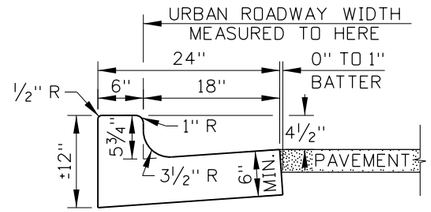

CURB AND GUTTER TYPE 2

(SEE NOTE NO. 4)

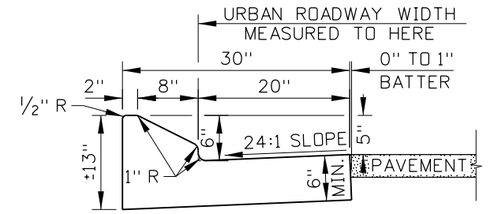

CURB AND GUTTER TYPE 3

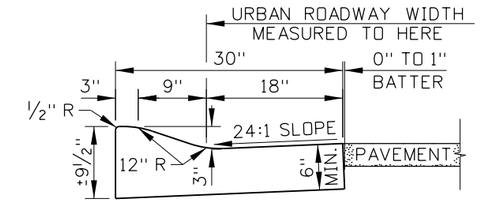

CURB AND GUTTER TYPE 4

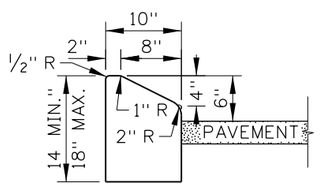

CURB TYPE 1

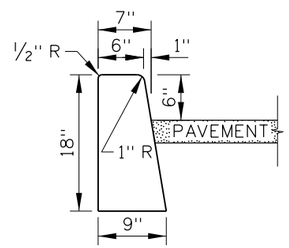

CURB TYPE 2

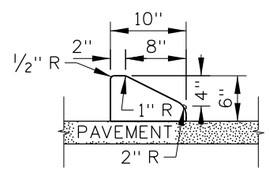

CURB TYPE 3

(SEE NOTE NO. 3)

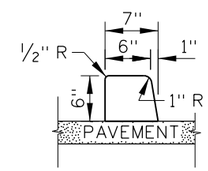

CURB TYPE 4

(SEE NOTE NO. 3)

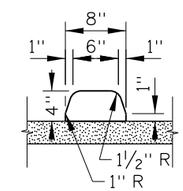

CURB TYPE 5

(SEE NOTE NO. 3)

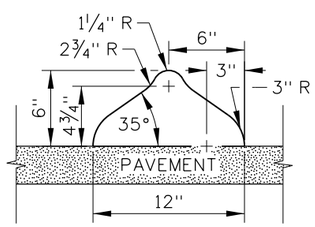

TRAFFIC SEPARATOR TYPE 1

(SEE NOTE NO. 3)

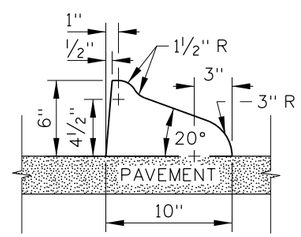

TRAFFIC SEPARATOR TYPE 2

(SEE NOTE NO. 3)

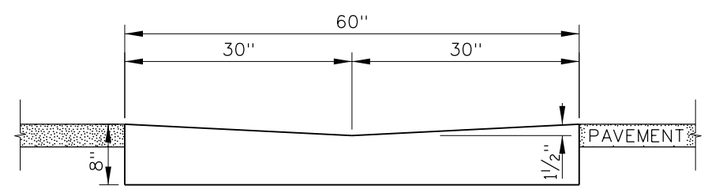

GUTTER TYPE 1

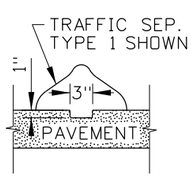

KEY DETAIL

(SEE NOTE NO. 3)

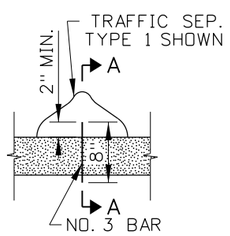

PIN DETAIL

(SEE NOTE NO. 3)

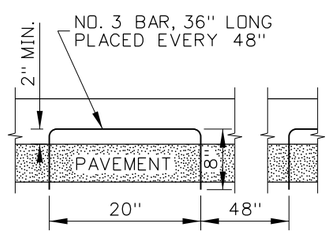

SECTION A-A

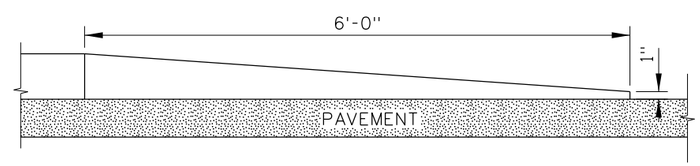

CURB TERMINUS DETAIL

(SEE NOTE NO. 5)

NOTES

1. TRANSITION BETWEEN DIFFERENT TYPES OVER 10 FEET.
2. PROVIDE 4 INCHES OF AGGREGATE BASE UNDER CURB AND GUTTER, CURB, OR GUTTER UNLESS THE CURB IS PLACED ON PAVEMENT.
3. PORTLAND CEMENT CONCRETE CURB OR TRAFFIC SEPARATOR ON ASPHALT CONCRETE PAVEMENT:

   PROVIDE A KEY IN THE PAVEMENT AT THE CENTERLINE OF THE CURB OR TRAFFIC SEPARATOR. SEE THE KEY DETAIL.

   CONCRETE CURBS OR TRAFFIC SEPARATORS MAY BE PINNED TO THE PAVEMENT STRUCTURE IN LIEU OF THE KEY. DRILL THE PAVEMENT AND PLACE PINS BEFORE THE CURB OR TRAFFIC SEPARATOR IS CONSTRUCTED. SEE THE PIN DETAIL.

   PORTLAND CEMENT CONCRETE CURB OR TRAFFIC SEPARATOR ON PORTLAND CEMENT CONCRETE PAVEMENT:

   USE AN EPOXY BONDING AGENT. NO KEY IS NEEDED.

   ASPHALT CONCRETE CURB OR TRAFFIC SEPARATOR ON ASPHALT CONCRETE PAVEMENT:

   NO KEY IS NEEDED. ENSURE THAT THE CURB IS BONDED TO THE PAVEMENT.
4. ENSURE THAT THE GUTTER SLOPE DOES NOT EXCEED 5 PERCENT AT CURB RAMPS.
5. TAPER THE LAST 6 FEET OF CURB AND GUTTER TYPES 1, 2, 3, AND 4 AND CURB TYPES 1 AND 2 DOWN TO A 1 INCH HEIGHT. TAPER CURB TYPES 3, 4, AND 5 AND TRAFFIC SEPARATORS TYPES 1 AND 2 DOWN TO A 1 INCH HEIGHT AT A 1:1 SLOPE.
6. DRAWING NOT TO SCALE.

ORIGINAL STORED AT: ITD, Headquarters 3311 West State Boise, Idaho

PROFESSIONAL ENGINEER LICENSED 13683 RYAN D. LANCASTER STATE OF IDAHO ORIGINAL SIGNED RYAN D. LANCASTER AUGUST 22, 2018

REVISIONS

NO.	DATE	BY	NO.	DATE	BY	NO.	DATE	BY
1	02-76		6	12-04	MSM	11	07-18	RDL
2	12-90	GB	7	06-05	MSM			
3	09-93	MSM	8	07-10	JAW			
4	12-94	MSM	9	11-14	RDL			
5	12-01	MSM	10	06-17	RDL			

SCALES SHOWN ARE FOR 11" X 17" PRINTS ONLY

CADD FILE NAME: 615-1_0818.dgn

DRAWING DATE: APRIL, 1961

IDAHO TRANSPORTATION DEPARTMENT

BOISE IDAHO

ORIGINAL SIGNED BY: KEVIN SABLAN

DESIGN/TRAFFIC SERVICES ENGINEER

STANDARD DRAWING

CURB AND GUTTER

English

STANDARD DRAWING NO. 615-1

SHEET 1 OF 1

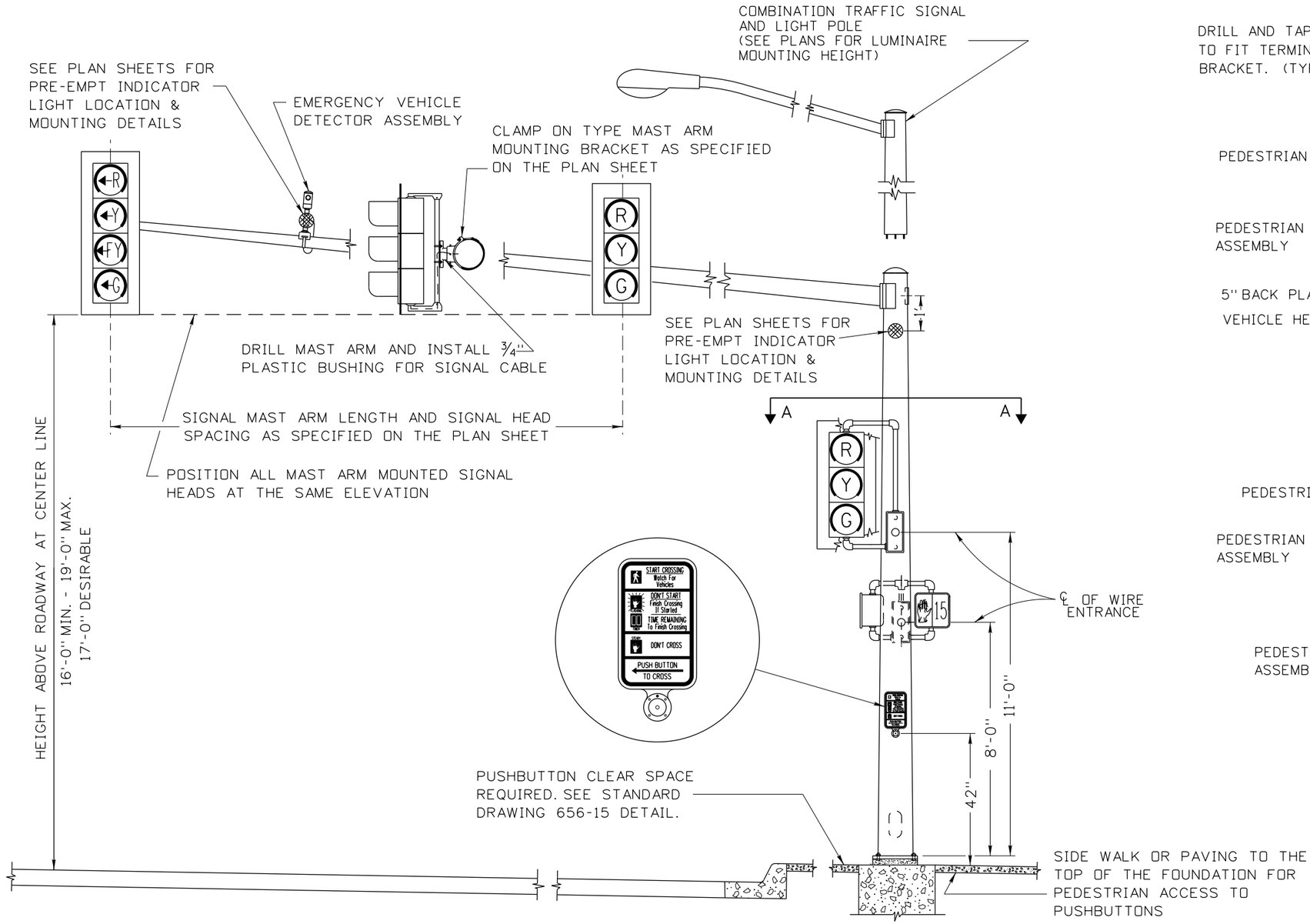

SINGLE MAST ARM POLE

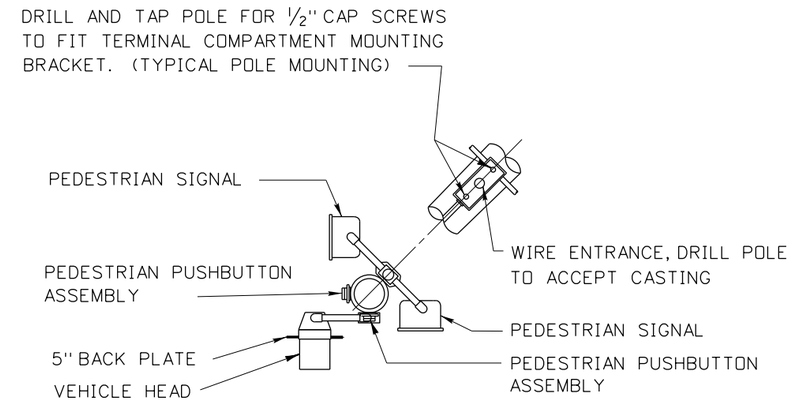

VIEW A-A

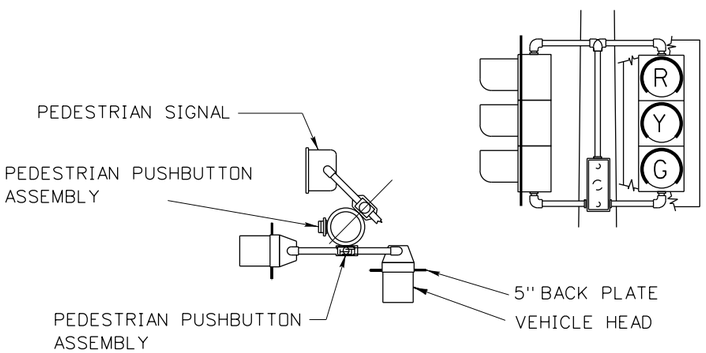

POLE MOUNTED HEADS FOR DUAL VEHICLE SIGNAL HEAD INSTALLATION

PEDESTRIAN PUSHBUTTON MOUNTING

1. PEDESTRIAN PUSHBUTTON ASSEMBLIES ARE TO BE MOUNTED AS PER MANUFACTURER'S INSTRUCTIONS.

NOTES:

1. THIS DRAWING SHOWS TYPICAL INSTALLATION DETAILS ONLY. SEE PLAN SHEETS FOR QUANTITY OF SIGNAL AND LIGHTING COMPONENTS TO BE INSTALLED.
2. ORIENTATION OF SIGNAL COMPONENTS SHALL BE AS SHOWN UNLESS OTHERWISE SPECIFIED ON THE PLAN SHEETS.
3. SEE STANDARD DRAWING 656-3 FOR FOUNDATION DETAILS.
4. ALL SIGNAL COMPONENTS SHALL BE LEVELED AFTER THE POLE HAS BEEN PLUMBED.
5. SPECIFIC LOCATION OF EACH POLE INSTALLATION SHALL BE AS INDICATED ON THE PROJECT PLAN SHEETS.

ORIGINAL STORED AT: ITD, Headquarters 3311 West State Boise, Idaho

ORIGINAL SIGNED BY: ROBERT KOEBERLEIN DATE ORIGINAL SIGNED: APRIL 25, 2014

REVISIONS

NO.	DATE	BY	NO.	DATE	BY	NO.	DATE	BY
1	12-94	HEB	6	04-14	HEB			
2	12-01	NQB						
3	07-05	HEB						
4	08-06	HEB						
5	07-10	HEB						

SCALES SHOWN ARE FOR 11" X 17" PRINTS ONLY

CADD FILE NAME: 656-1_0414.dgn

DRAWING DATE: AUGUST, 1994

IDAHO TRANSPORTATION DEPARTMENT

BOISE IDAHO

ORIGINAL SIGNED BY: CARL D. MAIN

DESIGN/TRAFFIC SERVICES ENGINEER

STANDARD DRAWING

MAST ARM TRAFFIC SIGNAL POLES

REQUIRES STD. DWG. 656-15

English

STANDARD DRAWING NO.

656-1

SHEET 1 OF 1

GENERAL NOTES:

1. THESE STRUCTURES SHALL CONFORM TO THE LATEST REVISION TO THE 1994 AASHTO SPECIFICATIONS FOR STRUCTURAL SUPPORTS FOR HIGHWAY SIGNS, LUMINAIRES AND TRAFFIC SIGNALS. WITH 80 M.P. WIND LOADING. MAXIMUM ALLOWABLE OVERSTRESS SHALL BE 120% FOR GROUPS 2 AND 3.
2. CLASS 1 LOADS FOR A 20 FT. MAST ARM SHALL BE BASED ON A 3 SECTION SIGNAL HEAD MOUNTED FARTHEST FROM THE POLE.
3. DESIGN LOADS SHALL BE BASED ON 12" POLYCARBONATE SIGNAL HEADS WITH 5" BACKPLATES AND STRAP ON BRACKET MOUNTING.

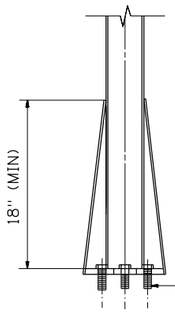

TYPE "J"

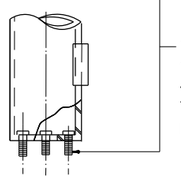

TYPE "L"

BOLTS WELDED IN PLATE (TYPE "L" ONLY) WITH
4 EA. PLAIN WASHERS
4 EA. LOCK WASHERS
4 EA. HEX NUTS
TO BE FURNISHED WITH EXTENSION SHAFT

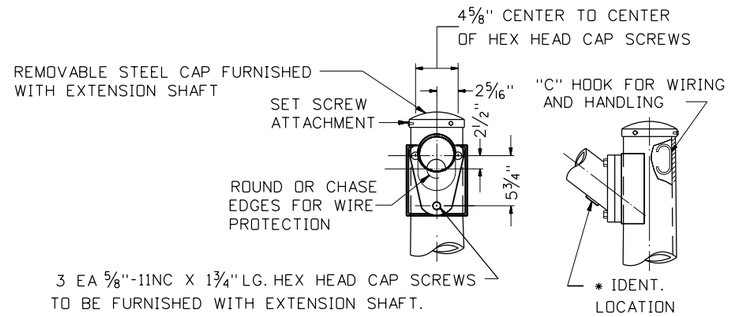

TYPE "L" LUMINAIRE ARM CONNECTION DETAIL "D"

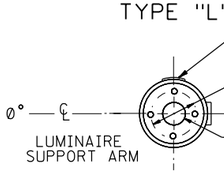

DETAIL "A"

STD. LOCATION OF EXTENTION HANDHOLE

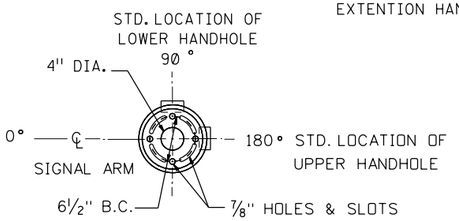

DETAIL "C" TOP VIEW

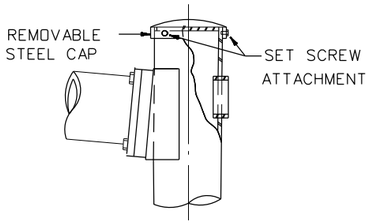

STEEL CAP DETAIL

4 EA.-1¼" - 7 (CLASS 1), OR
1½" - 6 (CLASS 2 AND 3)
HEX HEAD CAP SCREWS TO BE FURNISHED WITH THE MAIN SHAFT

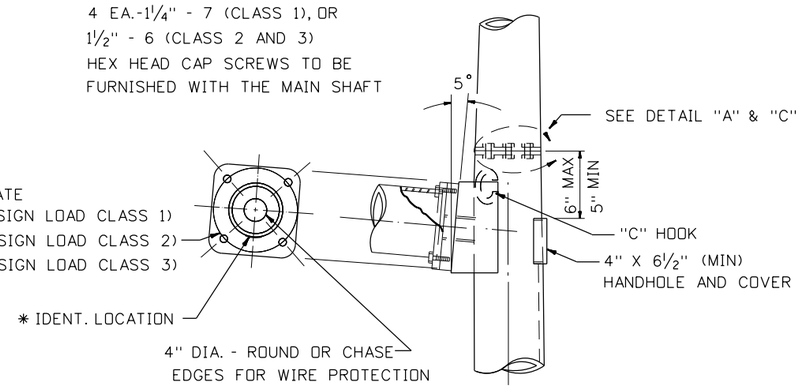

SIGNAL ARM CONNECTION DETAIL "B"

NOTE:
CLEAN ALL THREADS AND SEAT ALL BOLTS BEFORE ASSEMBLY.

½" 13NC TAP OR NUT HOLDER FOR GROUNDING

NOTE:
CLEAN ALL THREADS AND SEAT ALL BOLTS.

NOTE:
ANCHOR BOLTS SHALL PROJECT ABOVE THE BASE PLATE THE HEIGHT OF THE WASHER, TWO ANCHOR BOLT NUTS, AND THREE THREADS (ABOVE THE TOP OF ANCHOR BOLT NUTS).

4 EA. 1¾" X 84" X 6" ANCHOR BOLTS (CLASS 1, 2 & 3) WITH EIGHT GALV. WASHERS AND TWELVE HEX NUTS. TO BE FURNISHED WITH MAIN SHAFT.

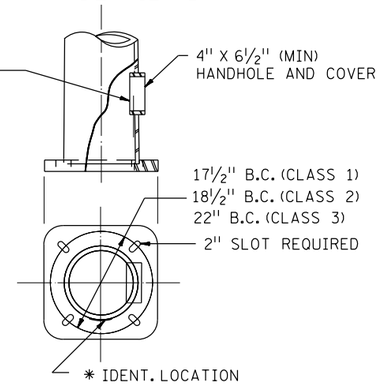

BASE DETAIL

NOTE: HEAD CONFIGURATION AND DIMENSIONS SHOWN FOR MAXIMUM LOADING, SEE PLANS FOR ACTUAL SIGN AND SIGNAL PLACEMENT.

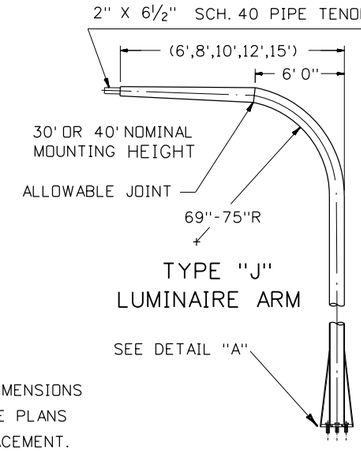

TYPE "J" LUMINAIRE ARM

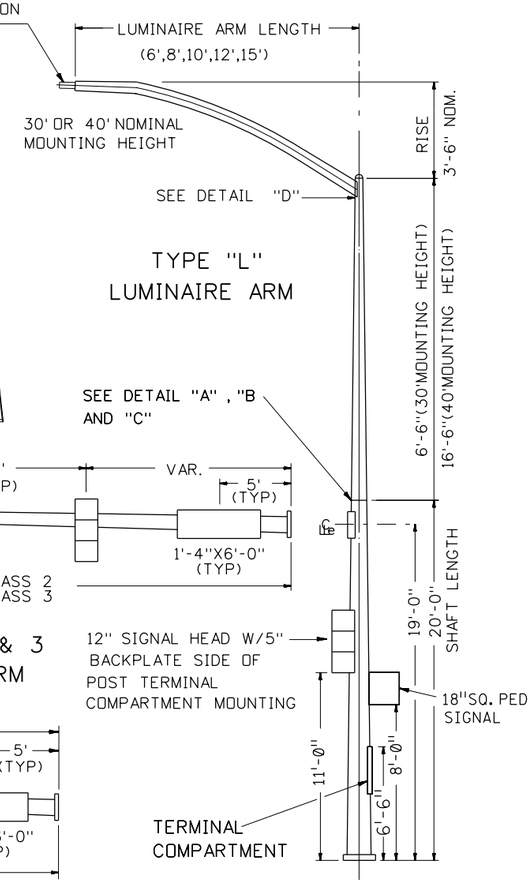

TYPE "L" LUMINAIRE ARM

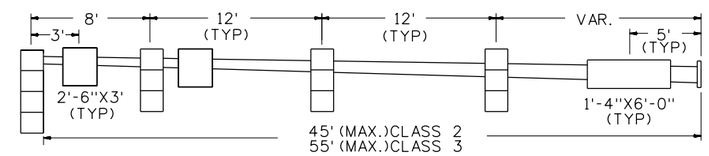

DESIGN LOAD -CLASS 2 & 3
40'-55' SIGNAL MAST ARM

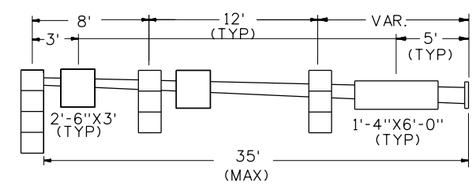

DESIGN LOAD -CLASS 1
20'-35' SIGNAL MAST ARM

SIGNAL POLE	
MAIN SHAFT	SIGNAL ARM LENGTH
CLASS 1	20' 25' 30' 35'
CLASS 2	40' 45'
CLASS 3	50' 55'

LUMINAIRE ARM		
ARM TYPE	MOUNTING HEIGHT	ARM LENGTH
J OR L	30' 40'	6' 8' 10' 12' 15'

* NOTE:
THE FOLLOWING IDENTIFICATION INFORMATION SHALL BE PERMANENTLY SHOWN ON APPROPRIATE COMPONENTS:

MANUFACTURER AND PRODUCTION DATE,
MAIN SHAFT - (CLASS),
SIGNAL ARM - (LENGTH),
LUMINAIRE EXTENSION - (TYPE & M. H.)
LUMINAIRE ARM - (LENGTH),

POLE ASSEMBLY IDENTIFICATION PROCEDURE

MAIN SHAFT CLASS — STATE — LUMINAIRE ARM TYPE — NOMINAL MOUNTING HEIGHT

ID - 2 - 45 - L - 4012

SIGNAL ARM LENGTH — LUMINAIRE ARM LENGTH

REVISIONS			
NO.	DATE	BY	DESCRIPTION
1	09-07	HEB	ADDED TERMINAL COMPARTMENT
2	09-09	HEB	REMOVED 20' LUMINAIRE MAST ARM

DESIGNED
DESIGN CHECKED
DETAILED
DRAWING CHECKED

SCALES SHOWN ARE FOR 11" X 17" PRINTS ONLY

CADD FILE NAME td14a&b_0909.dgn
DRAWING DATE: MARCH, 1997

IDAHO TRANSPORTATION DEPARTMENT

DISTRICT NINE TRAFFIC

PROJECT NO.

td-14a

SINGLE MASTARM POLES: CLASS 1, 2, AND 3
td14b IS REQUIRED
SEE td15a FOR DUAL MASTARM POLES

STANDARD MASTARM TRAFFIC SIGNAL POLES

English

COUNTY

KEY NUMBER

SHEET OF

NOT APPROVED
PRELIMINARY
FOR CONSTRUCTION

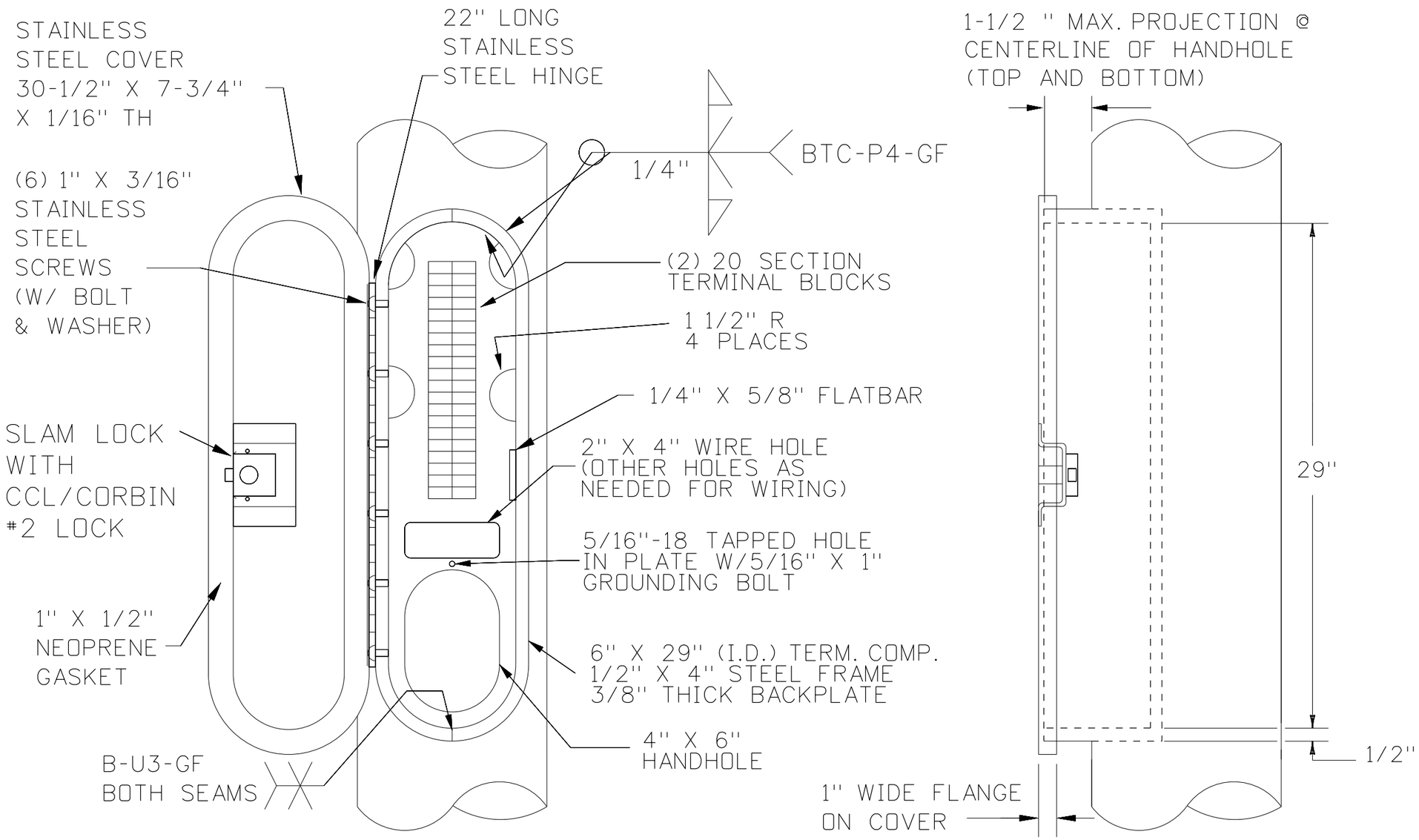

RECESSED TERMINAL COMPARTMENT DETAIL

REVISIONS								
NO.	DATE	BY	DESCRIPTION	DESIGNED	SCALES SHOWN ARE FOR 11" X 17" PRINTS ONLY	IDAHO TRANSPORTATION DEPARTMENT	PROJECT NO.	td-14b
				DESIGN CHECKED				MAIN SHAFT TERMINAL COMPARTMENT
				DETAILED	CADD FILE NAME s22td14a&b_0909.dgn			
				DRAWING CHECKED	DRAWING DATE: SEPTEMBER, 2007	DISTRICT NINE TRAFFIC		

English
COUNTY
KEY NUMBER
SHEET OF

NOT APPROVED FOR CONSTRUCTION
PRELIMINARY

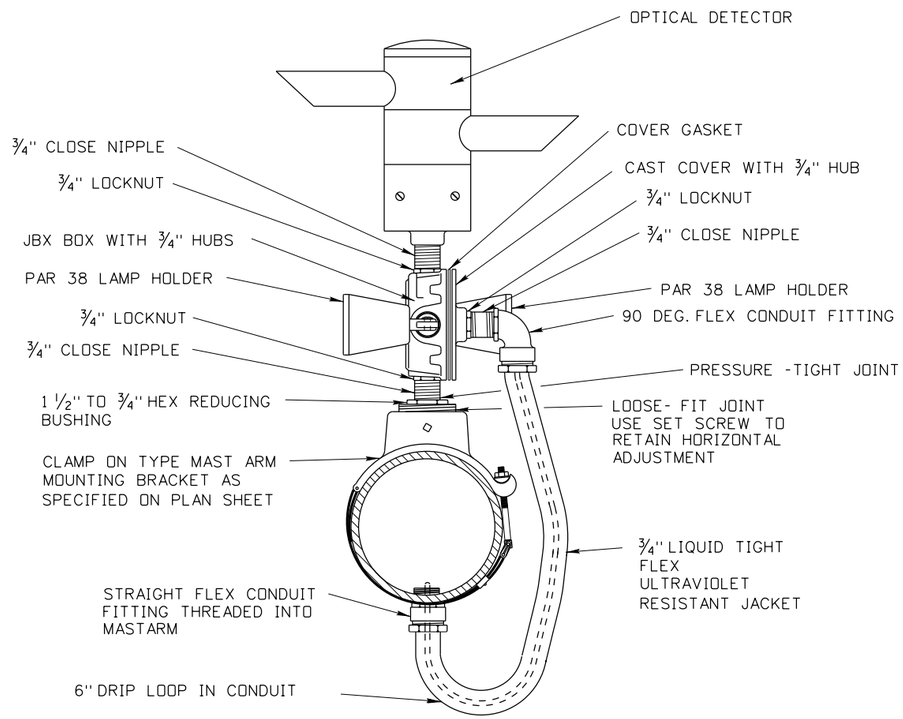

EMERGENCY VEHICLE DETECTOR
AND MOUNTING ASSEMBLY
VIEW B-B

USE ONE M-138 CABLE FOR DUAL CHANNEL OPTICAL DETECTOR (GTT 722) AND ONE IMSA 3 CONDUCTOR CABLE FOR DUAL CALL BACK INDICATOR LIGHTS

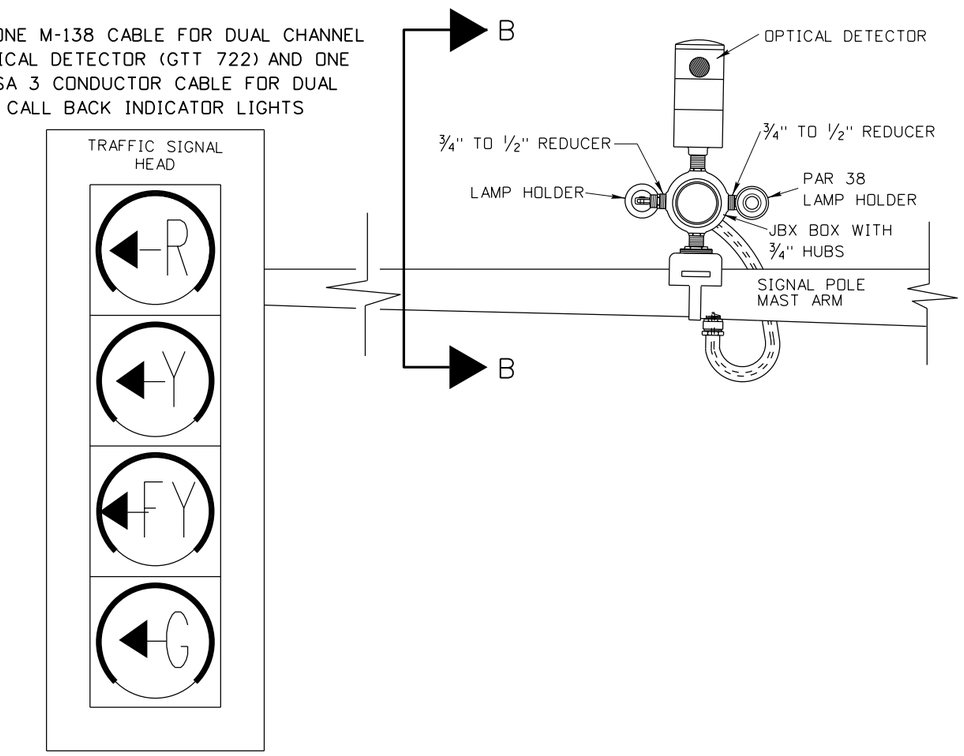

REVISIONS			
NO.	DATE	BY	DESCRIPTION
1	02-11	HEB	4 SECTION HEAD & CORRECTED LEVELS

DESIGNED
DESIGN CHECKED
DETAILED
DRAWING CHECKED

SCALES SHOWN ARE FOR 11" X 17" PRINTS ONLY
CADD FILE NAME td32a_0912.dgn
DRAWING DATE:

IDAHO TRANSPORTATION DEPARTMENT

DISTRICT XXXX TRAFFIC

PROJECT NO.

td32a

DUAL CHANNEL DETECTOR AND CALL BACK LIGHT

English
COUNTY
KEY NUMBER
SHEET OF

NOT APPROVED
PRELIMINARY
FOR CONSTRUCTION

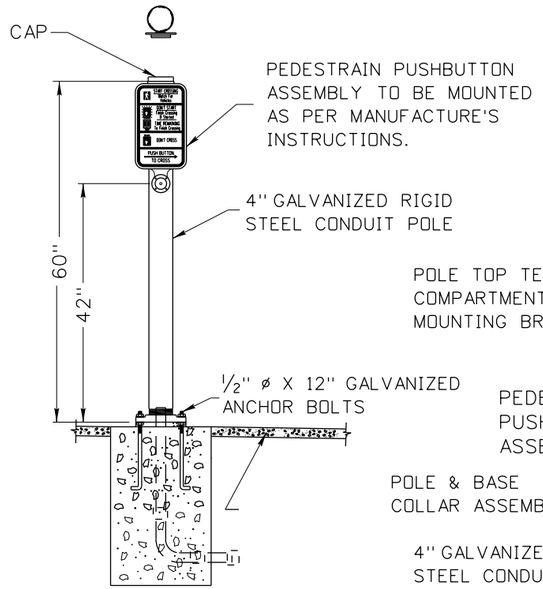

PEDESTRIAN PUSHBUTTON POLE

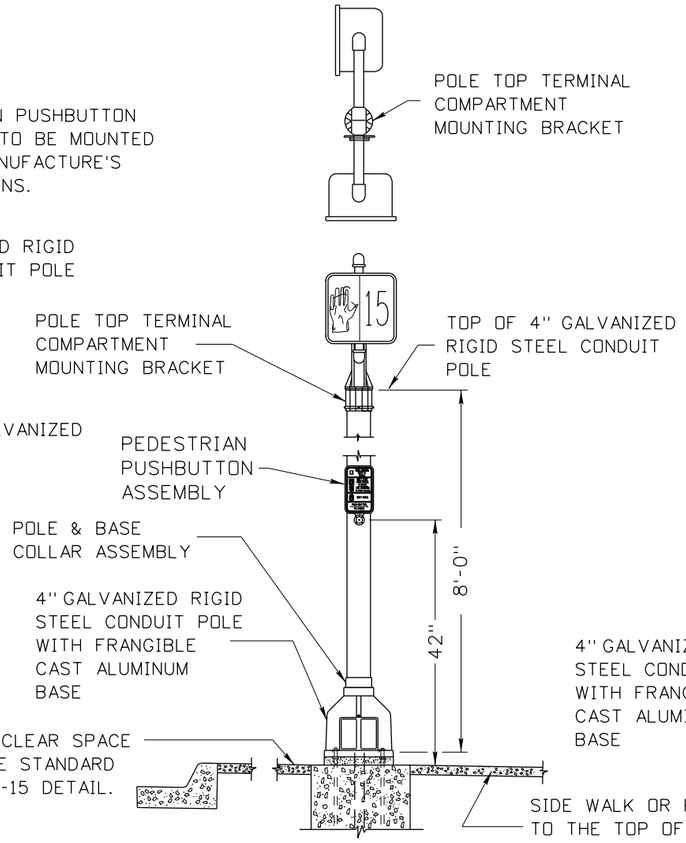

PEDESTRIAN SIGNAL

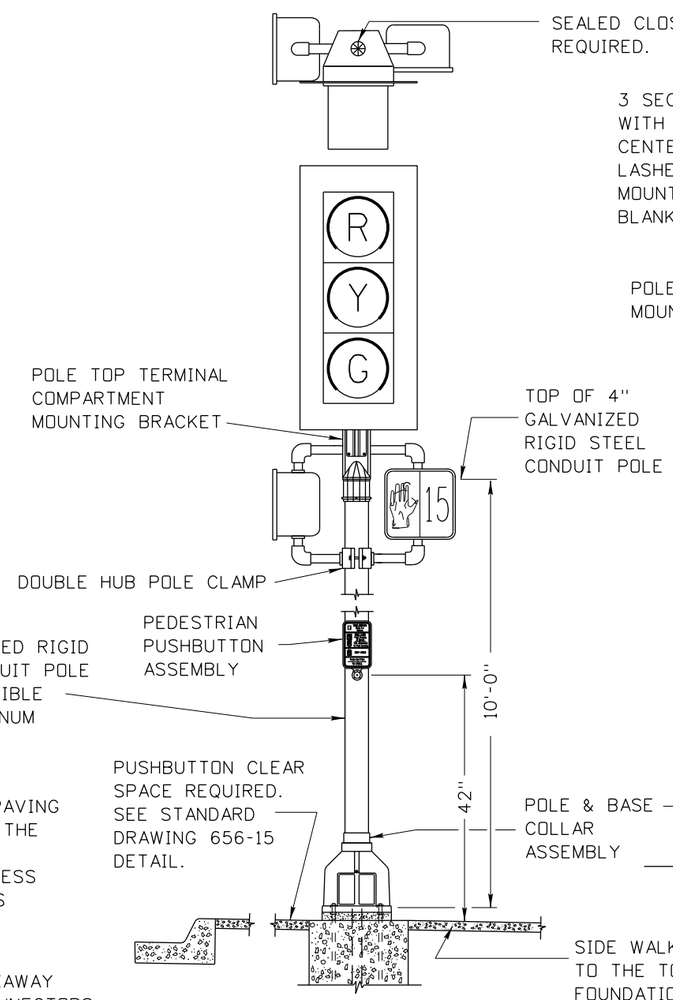

VEHICLE AND PEDESTRIAN SIGNAL

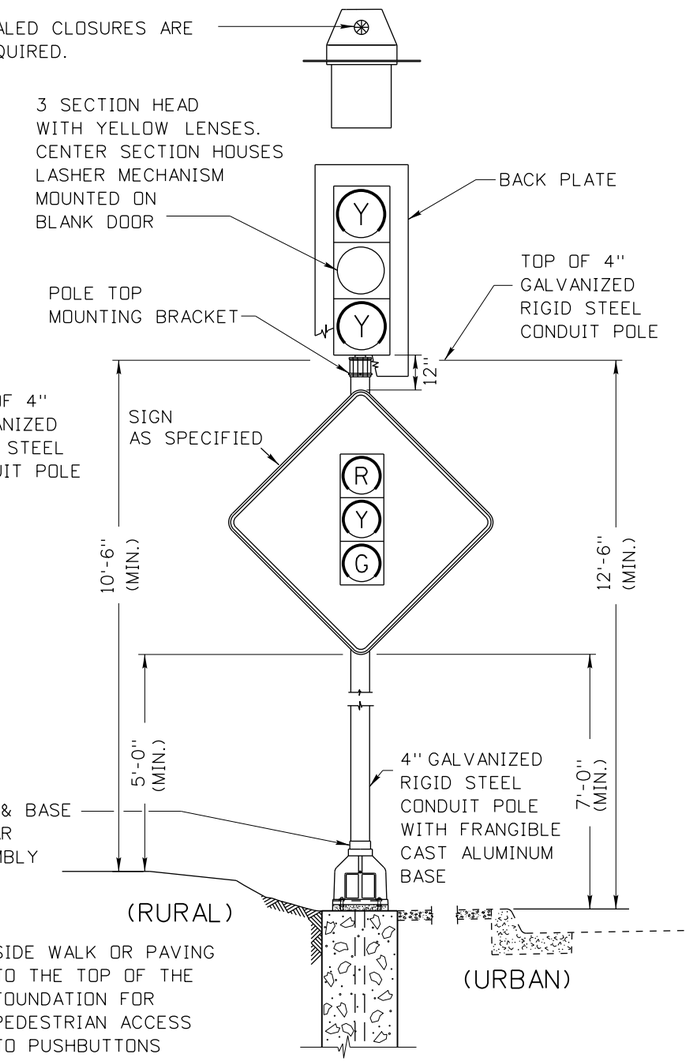

WARNING BEACON

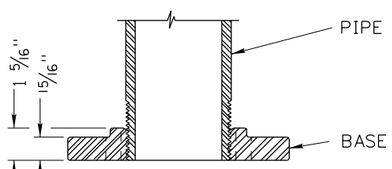

SECTION A-A

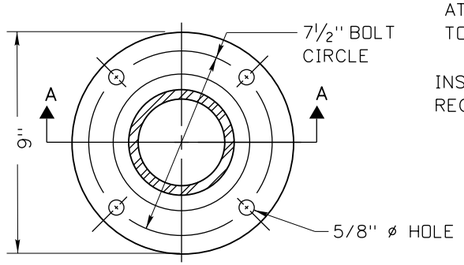

FRANGIBLE CAST IRON PIPE FLANGE

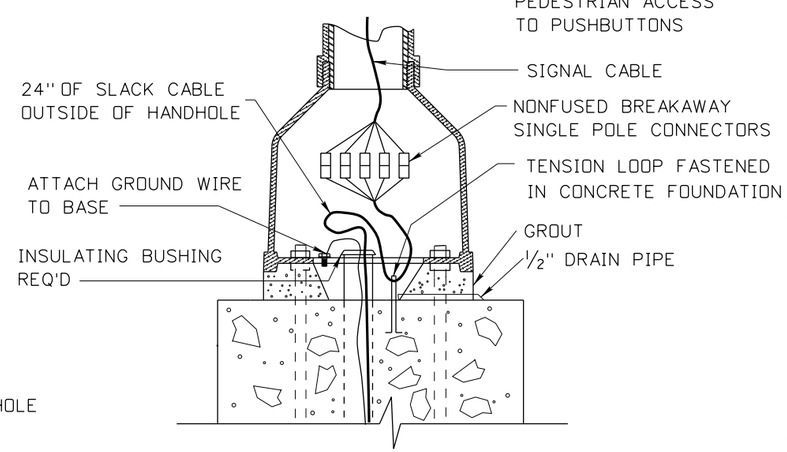

TYPICAL SIGNAL PEDESTAL CONNECTOR INSTALLATION

NOTES:

1. THIS DRAWING SHOWS TYPICAL INSTALLATION DETAILS ONLY. SEE PLAN SHEETS FOR QUANTITY AND LOCATION OF SIGNAL AND LIGHTING COMPONENTS TO BE INSTALLED.
2. ORIENTATION OF SIGNAL COMPONENTS SHALL BE AS SHOWN UNLESS OTHERWISE SPECIFIED ON THE PLAN SHEETS.
3. SEE STANDARD DRAWING 656-3 FOR FOUNDATION DETAILS.
4. ALL SIGNAL COMPONENTS SHALL BE LEVELED AFTER THE POLE HAS BEEN PLUMBED.
5. SPECIFIC LOCATION OF EACH POLE INSTALLATION SHALL BE AS INDICATED ON THE PROJECT PLAN SHEETS.
6. ALL CONDUIT ELBOWS USED IN CONCRETE BASES SHALL BE STEEL.
7. STEEL CONDUIT SHALL BE USED TO EXTEND ELBOWS BEYOND CONCRETE FOUNDATION.
8. SPARE STUB OUTS SHALL BE TERMINATED WITH A STEEL COUPLING AND PLASTIC PUSH PLUG AT BOTH ENDS.

PEDESTRIAN PUSHBUTTON MOUNTING

PEDESTRIAN PUSHBUTTON ASSEMBLIES ARE TO BE MOUNTED AS PER MANUFACTURER'S INSTRUCTIONS.

ORIGINAL STORED AT: ITD, Headquarters 3311 West State Boise, Idaho

ORIGINAL SIGNED BY: ROBERT KOEBERLEIN DATE ORIGINAL SIGNED: DECEMBER 5, 2016

REVISIONS

NO.	DATE	BY	NO.	DATE	BY	NO.	DATE	BY
1	12-94	HEB	6	04-14	HEB			
2	08-06	NQB	7	12-16	HEB			
3	12-07	HEB						
4	07-09	HEB						
5	07-10	HEB						

SCALES SHOWN ARE FOR 11" X 17" PRINTS ONLY

CADD FILE NAME: 656-2_1216.dgn

DRAWING DATE: AUGUST, 1994

IDAHO TRANSPORTATION DEPARTMENT

BOISE IDAHO

ORIGINAL SIGNED BY: TED MASON

DESIGN/TRAFFIC SERVICES ENGINEER

STANDARD DRAWING

FRANGIBLE CAST BASE TRAFFIC SIGNAL POLES

REQUIRES STD. DWG. 656-15

English

STANDARD DRAWING NO. 656-2

SHEET 1 OF 1

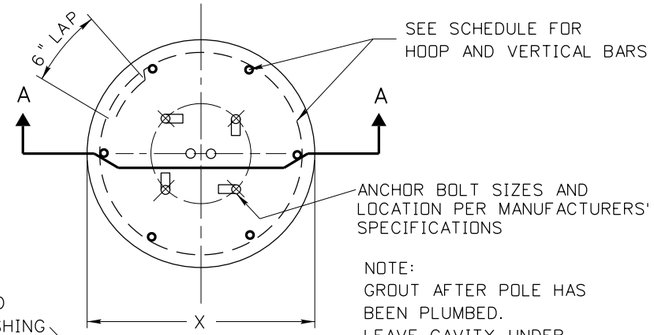

SECTION BB

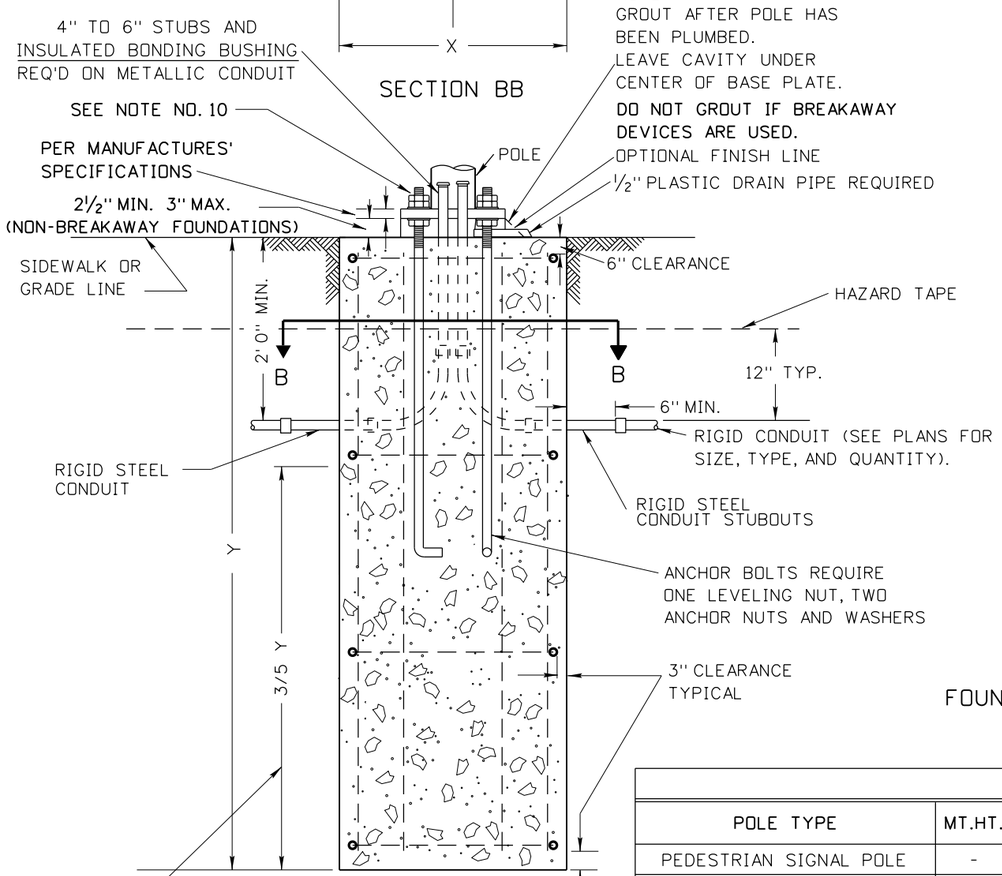

SECTION AA

TYPICAL POLE FOUNDATION
IN DRILLED HOLE

THE LOWER 3/5 OF THE FOUNDATION TO BE PLACED AGAINST UNDISTURBED SOIL UNLESS OTHERWISE APPROVED BY THE ENGINEER. THE UPPER 2/5 OF THE FOUNDATION MAY BE FORMED AS NEEDED.

✳ THE SLIP PLANE OF A BREAK AWAY POLE FOUNDATION SHALL NOT BE MORE THAN 4 INCHES FROM A 5.0 FOOT CHORD PERPENDICULAR TO THE CONTROL LINE OF THE ROADWAY.
THE CHORD SHALL INTERSECT THE SIDE SLOPE ON EACH SIDE OF THE FOUNDATION.

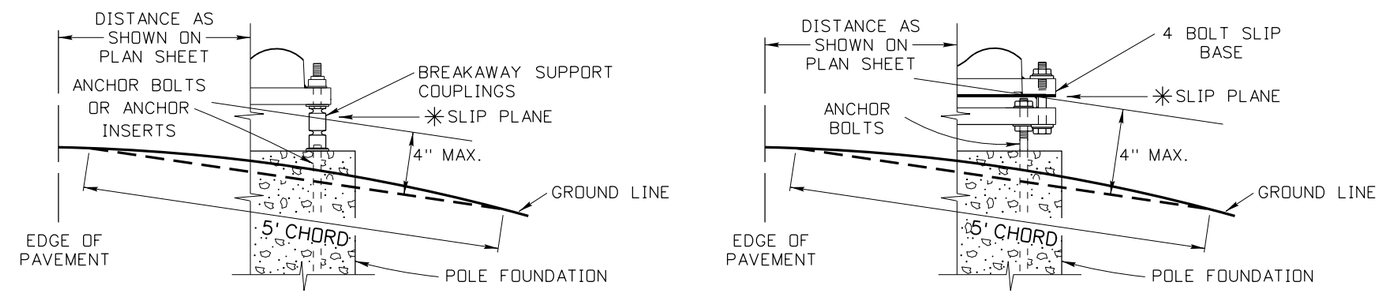

BREAKAWAY SUPPORT CLEARANCE DIAGRAMS

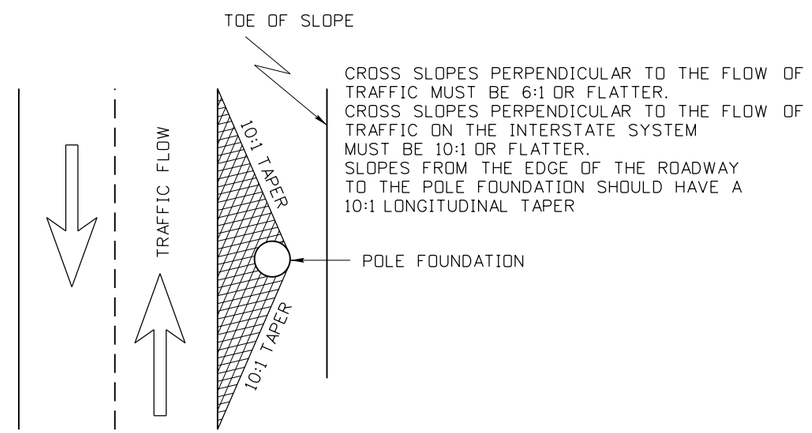

FOUNDATION GRADING / SLOPE TREATMENT

NOTES:

1. THE FOUNDATIONS SHALL BE LOCATED AS INDICATED ON THE PROJECT PLAN SHEETS.
2. FOUNDATION REBAR CAGES MAY BE WELDED IF THE STEEL REBAR CONFORMS TO ASTM A706/A706M AND ALL WELDING CONFORMS TO ANSI/AWS D1.4 (STRUCTURAL WELDING CODE - REINFORCING STEEL).
3. REBAR IN POLE FOUNDATIONS SHALL BE 60 KSI STEEL.
4. STEEL TEMPLATE REQUIRED FOR ANCHOR BOLT PLACEMENT.
5. SPARE STUBOUTS WHEN SHOWN ON PLAN SHEETS SHALL BE TERMINATED WITH A STEEL COUPLING AND FOAM PLUG AT BOTH ENDS.
6. CLASS 40 CONCRETE SHALL BE USED IN POLE FOUNDATIONS.
7. FOUNDATION CONCRETE SHALL ACHIEVE 100% STRENGTH AND CURE FOR A MINIMUM OF 7 DAYS BEFORE ANY LOADING IS APPLIED.
8. FILLER JOINT MATERIAL WILL BE PLACED AROUND POLE FOUNDATION WHEN POLE FOUNDATION IS IN CONTACT WITH SIDEWALK.
9. ELEVATION OF TOP OF POLE FOUNDATION SHALL MATCH THE ADJACENT PAVEMENT EDGE OR SIDEWALK ELEVATION.
10. ANCHOR BASE ASSEMBLIES SHALL BE INSTALLED AND TIGHTENED IN ACCORDANCE WITH SUBSECTION 619.03 OF THE ITD STANDARD SPECIFICATIONS FOR HIGHWAY CONSTRUCTION AND THE SUPPLEMENTAL SPECIFICATIONS.

POLE FOUNDATION SCHEDULE

POLE TYPE	MT.HT.	MASTARM LENGTH	FOUNDATION TYPE	X	Y	HOOPS			VERTICAL RODS			CU. YDS. CONCRETE
						NO.	SIZE	LIN.FT.	NO.	SIZE	LIN.FT.	
PEDESTRIAN SIGNAL POLE	-	-	A	2'-0"	5'-0"	4	#4	20'-10"	6	#4	25'-6"	.6
LIGHT POLE	30'	ALL	A	2'-0"	5'-0"	4	#4	20'-10"	6	#4	25'-6"	.6
LIGHT POLE	35'	ALL	B	2'-6"	7'-0"	4	#4	27'-2"	6	#6	37'-6"	1.3
LIGHT POLE	40'-50'	ALL	C	3'-0"	8'-0"	5	#4	41'-10"	8	#6	58'-0"	2.1
SIGNAL POLE		20' - 45'	D	3'-0"	9'-0"	5	#4	41'-10"	8	#6	66'-0"	2.4
PEDESTRIAN PUSHBUTTON POLE	4'-0"	-	E	1'-6"	2'-6"	-	-	-	-	-	-	.2
DUAL MAST ARM SIGNAL POLE	-	ALL	F	3'-0"	12'-0"	8	#5	66'-10"	12	#6	135'-0"	3.1
SIGNAL POLE	-	50' - 55'	F	3'-0"	12'-0"	8	#5	66'-10"	12	#6	135'-0"	3.1

ORIGINAL STORED AT: ITD, Headquarters 3311 West State Boise, Idaho

ORIGINAL SIGNED BY: TRI BUU DATE ORIGINAL SIGNED: APRIL 28, 2014

REVISIONS

NO.	DATE	BY	NO.	DATE	BY	NO.	DATE	BY
1	08-96	HEB						
2	07-03	HEB						
3	05-05	HEB						
4	07-10	EBG						
5	04-14	HEB						

SCALES SHOWN ARE FOR 11" X 17" PRINTS ONLY

CADD FILE NAME: i7c10414.dgn

DRAWING DATE: DECEMBER, 1994

IDAHO TRANSPORTATION DEPARTMENT

BOISE IDAHO

ORIGINAL SIGNED BY: CARL D. MAIN

DESIGN/TRAFFIC SERVICES ENGINEER

STANDARD DRAWING

MAST ARM SIGNAL POLE, LIGHTING POLE AND PEDESTRIAN POLE FOUNDATION DETAILS

REQUIRES STD. DWG. I-7-C-2

English

STANDARD DRAWING NO.

I-7-C-1

SHEET 1 OF 1

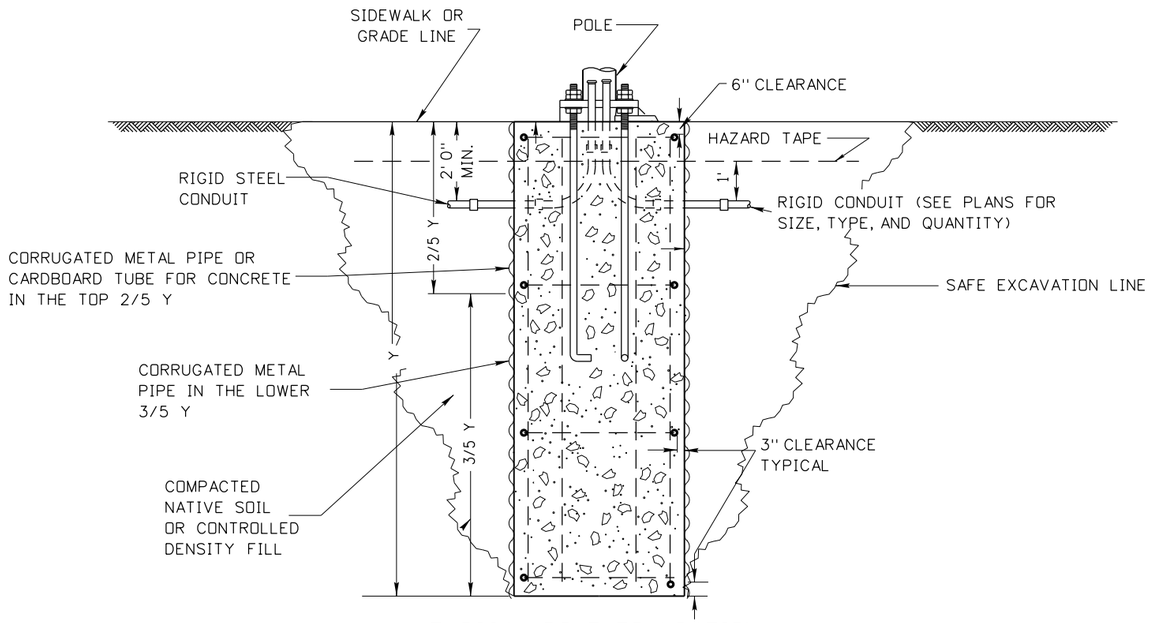

TYPICAL POLE FOUNDATION
IN EXCAVATION

EXCAVATION NOTES:

1. IF CORRUGATED METAL PIPE IS USED UP TO SIDEWALK OR GRADE LINE, CUT OUT HOLE FOR THE CONDUITS WILL BE EQUAL TO THE DIAMETER OF CONDUIT OR CONDUITS PLUS ONE INCH.
2. WHEN NATIVE SOIL IS USED FOR BACKFILL, IT SHALL BE COMPACTED IN ACCORDANCE WITH SUBSECTION 210.03 OF THE IDAHO STANDARD SPECIFICATIONS FOR HIGHWAY CONSTRUCTION AND SUPPLEMENTAL SPECIFICATIONS.
3. IF CONTROL DENSITY FILL IS USED FOR BACK FILL, IT SHALL HAVE A COMPRESSIVE STRENGTH OF 100 PSI TO 300 PSI.
4. DRAWING NOT TO SCALE.

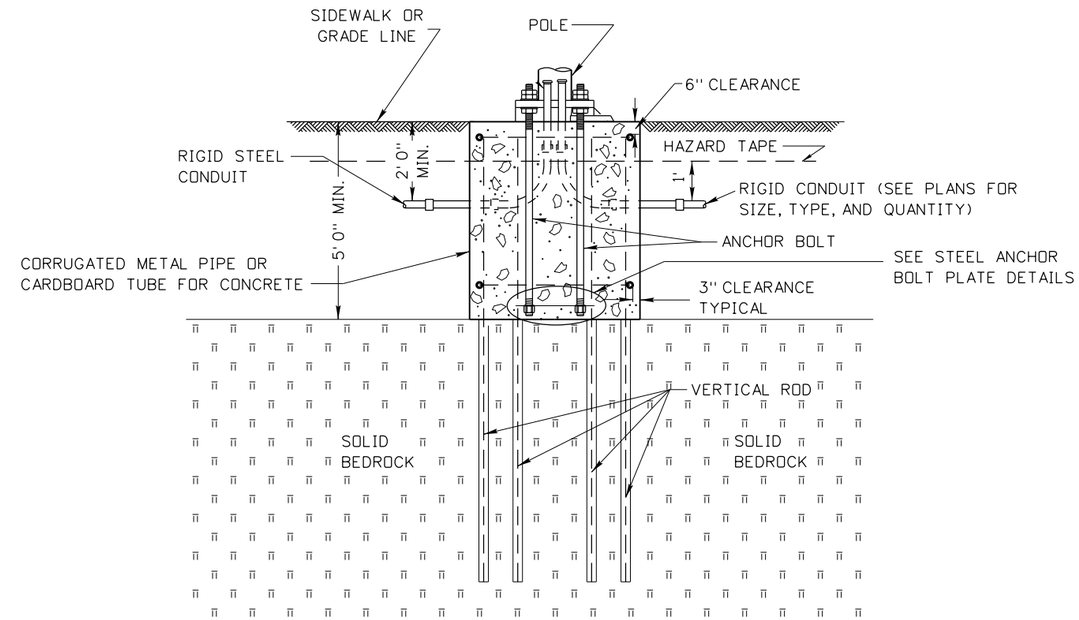

TYPICAL POLE FOUNDATION
IN BEDROCK

SOLID BEDROCK NOTES:

1. IF DEPTH TO BEDROCK IS LESS THAN 5', NOTIFY THE ENGINEER AND REDESIGN OF THE FOUNDATION MAY BE REQUIRED.
2. SOCKET ALL VERTICAL RODS FULL LENGTH AS SHOWN ON STANDARD DRAWING I-7-C-1 IN BEDROCK. DIAMETERS OF DRILLED HOLES FOR VERTICAL RODS SHALL BE AT LEAST 2 INCHES. FILL DRILLED HOLES WITH GROUT, 705.02, TYPE B, CLASS 1.
3. EXCAVATION NOTES APPLY TO THIS APPLICATION.
4. DRAWING NOT TO SCALE.

STEEL ANCHOR BOLT PLATE DETAILS

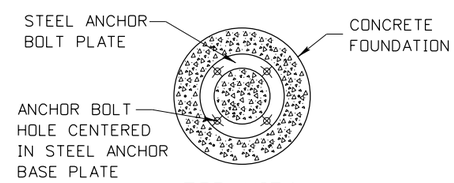

TOP VIEW

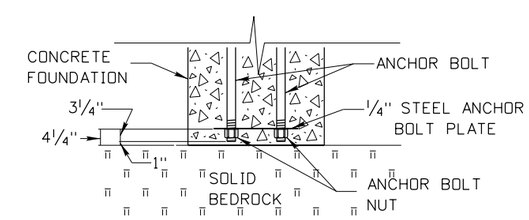

SIDE VIEW

ANCHOR BOLT PLATE SCHEDULE		
BOLT CIRCLE	OUTSIDE DIAMETER	INSIDE DIAMETER
17½"	21¼"	13¾"
18½"	22¼"	14¾"
22"	26¼"	17¾"

NOT TO SCALE

SEE STANDARD DRAWING I-7-C-1 FOR DETAILS

ORIGINAL STORED AT: ITD, Headquarters 3311 West State Boise, Idaho

ORIGINAL SIGNED BY: TRI BUU
DATE ORIGINAL SIGNED: NOVEMBER 25, 2014

REVISIONS								
NO.	DATE	BY	NO.	DATE	BY	NO.	DATE	BY
1	11-14	HEB						

SCALES SHOWN ARE FOR 11" X 17" PRINTS ONLY

CADD FILE NAME: i7c21114.dgn

DRAWING DATE: APRIL, 2014

IDAHO TRANSPORTATION DEPARTMENT

BOISE IDAHO

ORIGINAL SIGNED BY: RYAN D. LANCASTER
STANDARDS ENGINEER

STANDARD DRAWING

MAST ARM SIGNAL POLE, LIGHTING POLE AND PEDESTRIAN POLE FOUNDATION DETAILS

REQUIRES STD. DWG. I-7-C-1

English

STANDARD DRAWING NO.

I-7-C-2

SHEET 1 OF 1

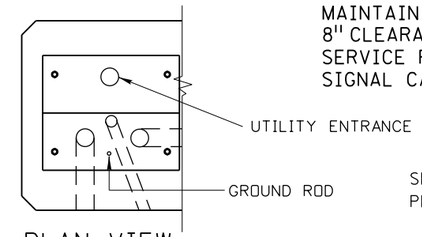

PLAN VIEW

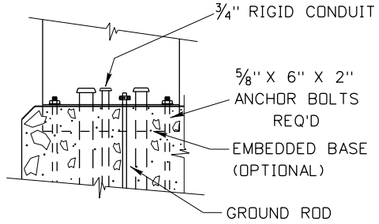

FRONT VIEW PEDESTAL INSTALLATION DETAIL

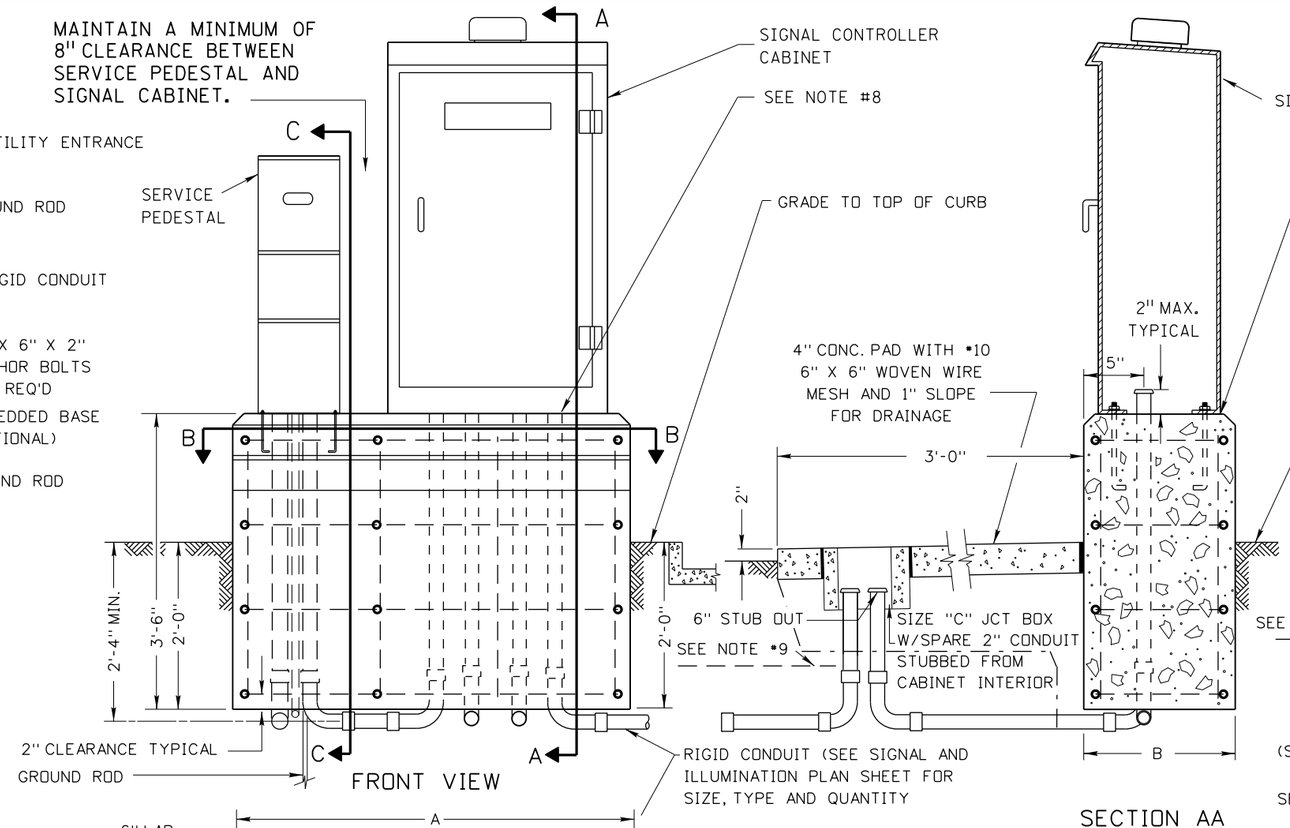

FRONT VIEW

SECTION AA

SECTION CC

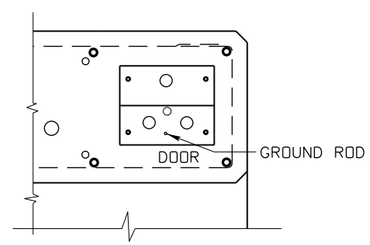

VERIFY PLACEMENT OF 5/8" X 6" X 2" ANCHOR BOLTS

ALTERNATE SERVICE PEDESTAL LOCATION

(TO BE APPROVED BY ENGINEER)

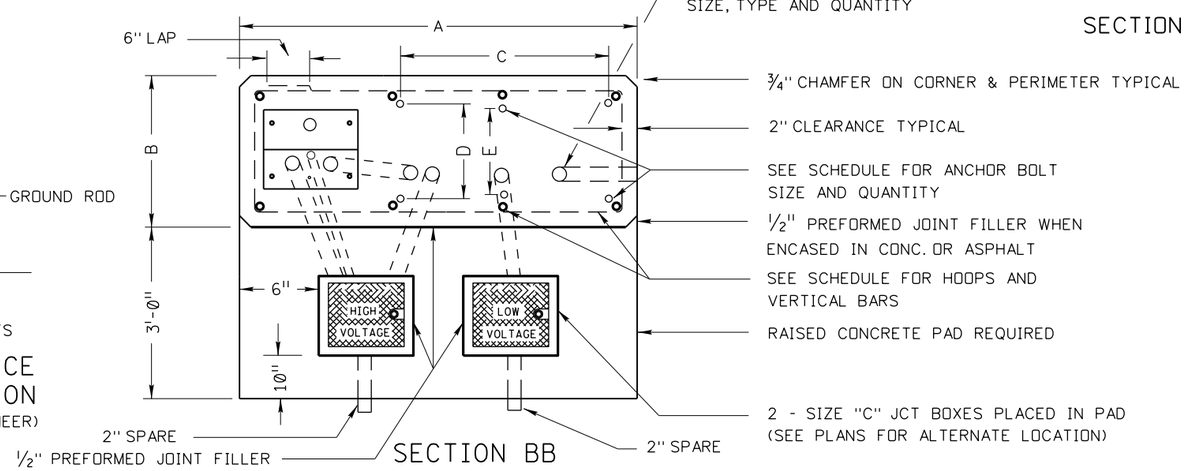

SECTION BB

NOTES:

1. THE FOUNDATION SHALL BE LOCATED AS INDICATED ON THE PROJECT PLAN SHEETS.
2. FOUNDATION REBAR CAGES MAY BE WELDED IF THE REBAR CONFORMS TO ASTM A706/A706M AND ALL WELDING CONFORMS TO ANSI/AWS D1.4 (STRUCTURAL WELDING CODE - REINFORCING STEEL).
3. ALL CONDUITS, ELBOWS, AND COUPLINGS WITHIN AND PROTRUDING FROM THE FOUNDATION SHALL BE RIGID STEEL. THE REMAINING CONDUITS SHALL BE AS SHOWN ON THE PLANS.
4. STUBOUTS SHALL BE TERMINATED WITH A STEEL BONDING BUSHING.
5. FOAM PLUG REQUIRED AT BOTH ENDS OF SPARE CONDUITS.
6. GROUND IN ACCORDANCE WITH N.E.C.
7. CONDUIT SHALL BE INSTALLED IN SUCH A MANNER AS TO NOT CAUSE MODIFICATION OF THE CABINETS.
8. GRADE AREA TO PROVIDE DRAINAGE AWAY FROM CABINET FOUNDATION.
9. 6" WIDE ELECTRICAL HAZARD TAPE INSTALLED 1'-0" ABOVE CONDUIT (TYPICAL OF ALL CONDUIT PLACED IN GROUND).
10. IF SUPPLIED, USE SERVICE PEDESTAL BASE FOR ANCHOR BASE TEMPLATE.
11. NOT TO SCALE

FOUNDATION SCHEDULE

CABINET AND SERVICE PEDESTAL

CABINET TYPE	FOUNDATION TYPE	A	B	C	D	E	HOOPS			VERTICAL RODS			CU. YDS. CONC.		CABINET ANCHOR BOLTS		SERVICE PEDESTAL ANCHOR BOLTS	
							NO.	SIZE	LIN. FT.	NO.	SIZE	LIN. FT.	FOUNDATION	PAD	QNTY.	SIZE	QNTY.	SIZE
SIGNAL	M	5'-6"	1'-8"	—	—	1'-0"	4	#4	54'-0"	8	#4	25'-4"	1.2	.2	2	3/4" X 18" X 2 1/4"	4	5/8" X 6" X2"
	P & R	6'-8"	2'-5"	3'-4 3/4"	1'-6 1/2"	—	4	#4	69'-4"	8	#4	25'-4"	2.1	.25	4	3/4" X 18" X 2 1/4"	4	5/8" X 6" X2"

REVISIONS

NO.	DATE	BY	NO.	DATE	BY	NO.	DATE	BY
1	08-96	NQB						
2	12-04	HEB						
3	05-05	HEB						
4	05-14	HEB						

SCALES SHOWN ARE FOR 11" X 17" PRINTS ONLY

CADD FILE NAME: 656-5_0614.dgn

DRAWING DATE: DECEMBER, 1994

IDAHO TRANSPORTATION DEPARTMENT

BOISE IDAHO

ORIGINAL SIGNED BY: CARL D. MAIN

DESIGN/TRAFFIC SERVICES ENGINEER

STANDARD DRAWING

SIGNAL CABINET & SERVICE PEDESTAL FOUNDATION DETAILS

English

STANDARD DRAWING NO.

656-5

SHEET 1 OF 1

ORIGINAL STORED AT: ITD, Headquarters 3311 West State Boise, Idaho

ORIGINAL SIGNED BY: ROBERT KOEBERLEIN DATE ORIGINAL SIGNED: JUNE 19, 2014

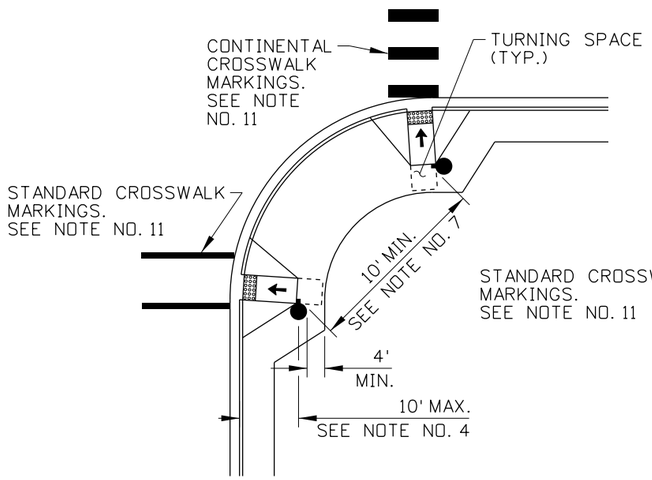

PERPENDICULAR CURB RAMP

WITH CROSSWALKS FAR APART

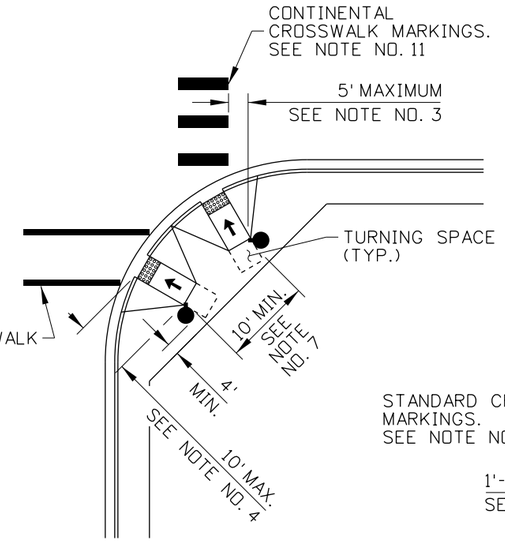

PERPENDICULAR CURB RAMP

WITH CROSSWALKS CLOSE TOGETHER

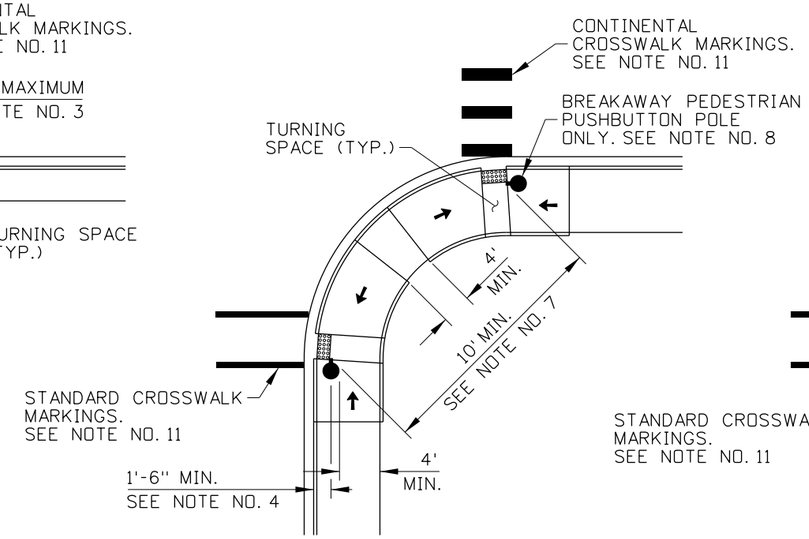

PARALLEL OR COMBINATION CURB RAMP

WITH WIDE SIDEWALK

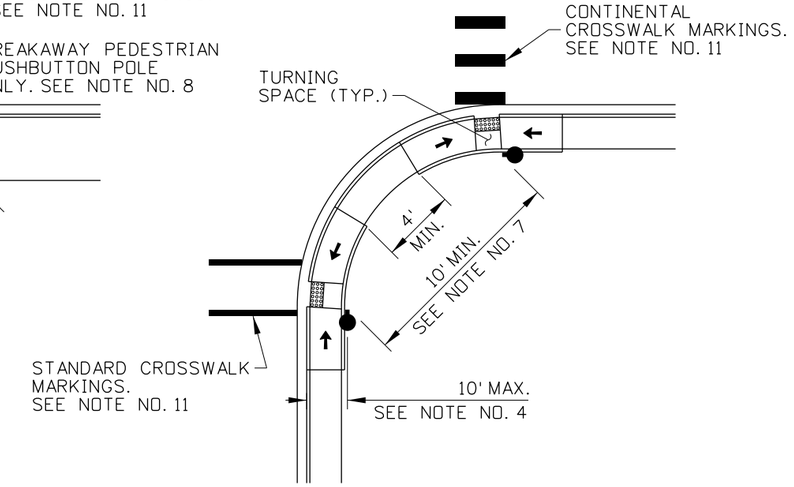

PARALLEL CURB RAMP

WITH NARROW SIDEWALK

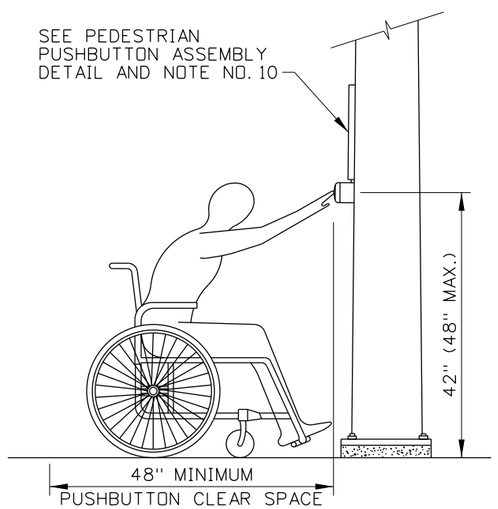

FORWARD APPROACH

SEE NOTE NOS. 2 & 6

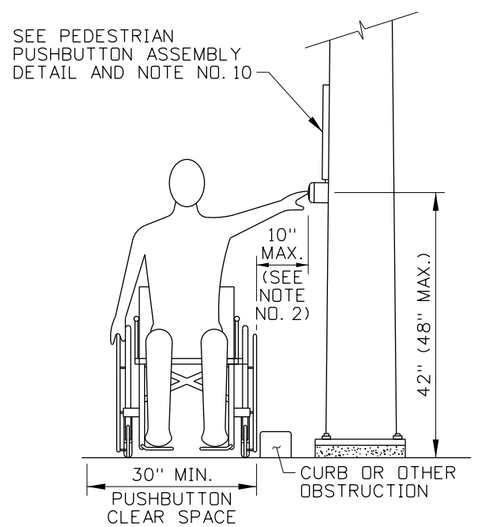

PARALLEL APPROACH

SEE NOTE NOS. 2 & 6

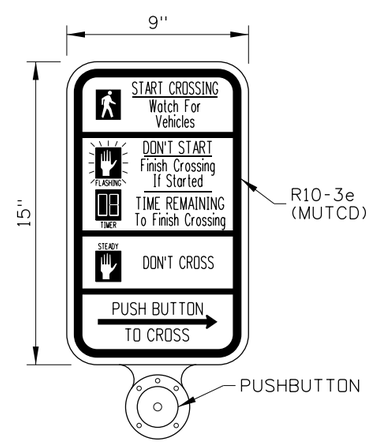

PEDESTRIAN PUSHBUTTON ASSEMBLY DETAIL

SEE NOTE NO. 10

NOTES

1. FOUR TYPICAL CONFIGURATIONS ARE SHOWN. FOR OTHER CONFIGURATIONS, THE MAXIMUM AND MINIMUM DIMENSIONS SHOWN REMAIN APPLICABLE. WHERE CURB AND CURB RAMPS ARE NOT PRESENT, MEASURE FROM THE EDGE OF TRAVELED WAY.
2. PROVIDE A PUSHBUTTON CLEAR SPACE, WITH 30" BY 48" MINIMUM DIMENSIONS, ADJACENT TO PEDESTRIAN PUSHBUTTONS. ENSURE THAT THE CLEAR SPACE SURFACE IS FIRM, STABLE, AND SLIP RESISTANT. POSITION THE CLEAR SPACE SO THE PUSHBUTTON CAN BE ACCESSED WITH EITHER A FORWARD OR PARALLEL APPROACH. AN OBSTRUCTION, UP TO 10" IN DEPTH, BETWEEN THE CLEAR SPACE AND THE PUSHBUTTON IS PERMITTED FOR A PARALLEL APPROACH. WHERE CURB RAMPS ARE USED, THE TURNING SPACE FOR THE CURB RAMP MAY DOUBLE AS THE CLEAR SPACE.
3. PLACE PUSHBUTTON BETWEEN THE EDGE OF THE CROSSWALK LINE (EXTENDED) FARTHEST FROM THE CENTER OF THE INTERSECTION AND THE SIDE OF A CURB RAMP (IF PRESENT), BUT NOT MORE THAN 5' FROM THE SAID CROSSWALK LINE.
4. PLACE PUSHBUTTON BEHIND THE FACE OF CURB OR OUTSIDE THE EDGE OF TRAVELED WAY A MINIMUM DISTANCE OF 1'-6" AND A MAXIMUM DISTANCE OF 10'.
5. ENSURE THAT THE FACE OF THE PUSHBUTTON IS PARALLEL TO THE CROSSWALK TO BE USED.
6. MOUNT THE PUSHBUTTON 42" ABOVE THE CLEAR SPACE. THE MAXIMUM MOUNTING HEIGHT IS 48".
7. PROVIDE A MINIMUM DISTANCE OF 10' BETWEEN PEDESTRIAN PUSHBUTTONS. WHERE THERE ARE PHYSICAL CONSTRAINTS ON A PARTICULAR CORNER THAT MAKE IT IMPRACTICAL TO PROVIDE THE 10' SEPARATION BETWEEN THE TWO PEDESTRIAN PUSHBUTTONS, THE PUSHBUTTONS MAY BE PLACED CLOSER TOGETHER OR ON THE SAME POLE.
8. PUSHBUTTONS MAY BE INSTALLED ON A SIGNAL POLE OR PEDESTRIAN PUSHBUTTON POLES. ENSURE THAT POLES WITHIN 10' OF THE FACE OF CURB OR EDGE OF TRAVELED WAY HAVE BREAKAWAY FEATURES.
9. INSTALL ACCESSIBLE PEDESTRIAN SIGNALS WHEN RECOMMENDED BY AN ENGINEERING STUDY.
10. USE MODULAR OR CAST PEDESTRIAN PUSHBUTTON ASSEMBLIES. DO NOT USE H FRAME PEDESTRIAN PUSHBUTTON ASSEMBLIES. USE THE R10-3e(MUTCD) SIGN ON THE PUSHBUTTON ASSEMBLY.
11. CROSSWALK MARKINGS MAY VARY.
12. DRAWINGS NOT TO SCALE.

ORIGINAL STORED AT: ITD, Headquarters 3311 West State Boise, Idaho

ORIGINAL SIGNED BY: RYAN D. LANCASTER DATE ORIGINAL SIGNED: JUNE 17, 2014

REVISIONS								
NO.	DATE	BY	NO.	DATE	BY	NO.	DATE	BY

SCALES SHOWN ARE FOR 11" X 17" PRINTS ONLY

CADD FILE NAME: 656-15_0614.dgn

DRAWING DATE: MAY, 2014

IDAHO TRANSPORTATION DEPARTMENT

BOISE IDAHO

ORIGINAL SIGNED BY: CARL D. MAIN

DESIGN/TRAFFIC SERVICES ENGINEER

STANDARD DRAWING

PEDESTRIAN PUSHBUTTON PLACEMENT

English

STANDARD DRAWING NO. 656-15

SHEET 1 OF 1

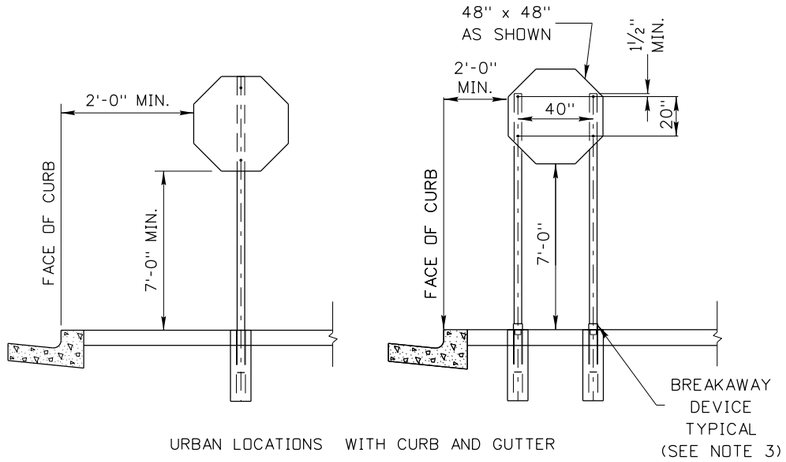

SIGN HEIGHT AND LATERAL LOCATION

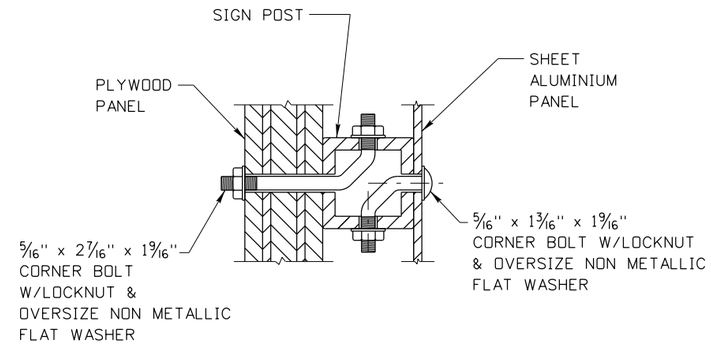

CORNER BOLTS MAY BE USED WITH BACK TO BACK INSTALLATIONS

BACK TO BACK SIGN MOUNTING DETAILS

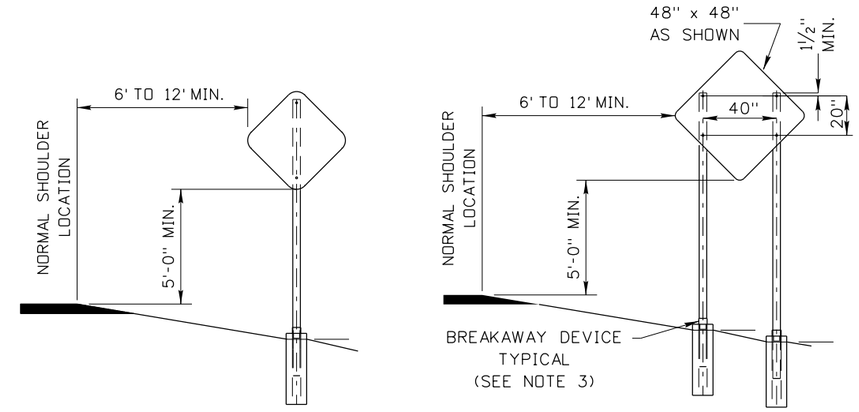

SIGN HEIGHT AND LATERAL LOCATION

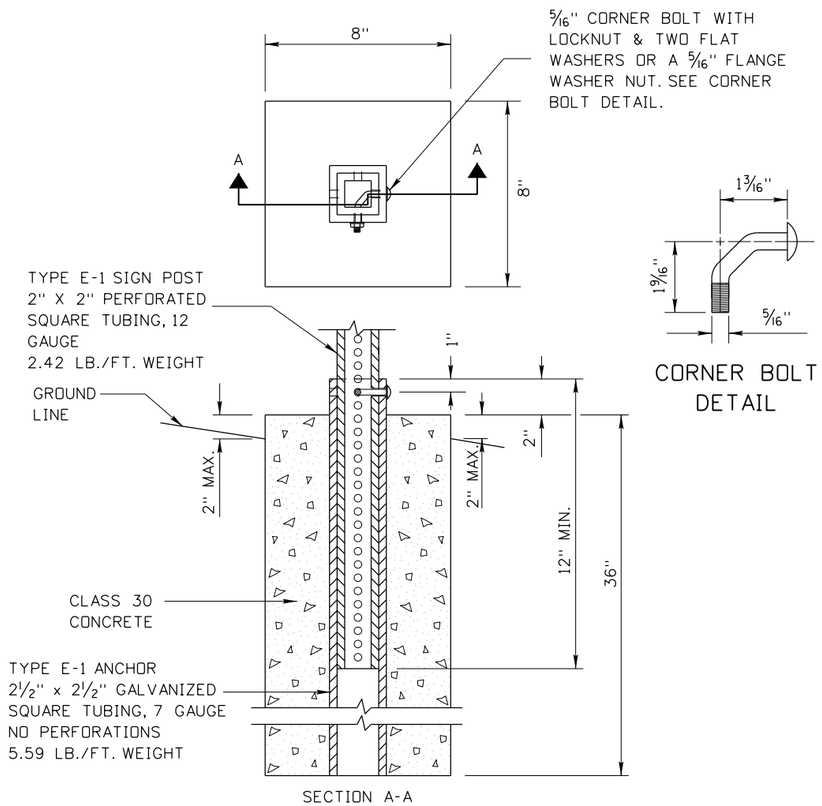

CORNER BOLT DETAIL

2" X 2" SIGN POST INSTALLATION DETAILS

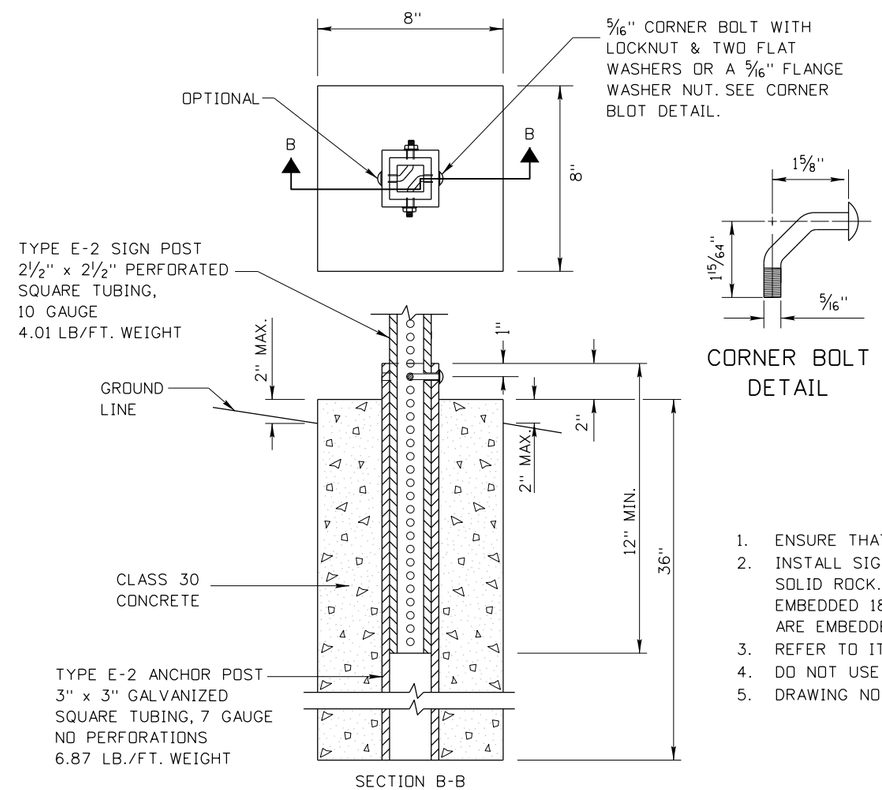

CORNER BOLT DETAIL

2½" X 2½" SIGN POST INSTALLATION DETAILS

NOTES

1. ENSURE THAT THE BOTTOM OF ANCHOR IS BE KEPT OPEN TO DRAIN.
2. INSTALL SIGN POST AND ANCHOR IN FOUNDATION OR GROUT INTO SOLID ROCK. ENSURE THAT THE 2" X 2" POST INSTALLATIONS ARE EMBEDDED 18" ONTO SOLID ROCK AND 2½" X 2½" POST INSTALLATIONS ARE EMBEDDED 24" INTO SOLID ROCK.
3. REFER TO ITD QUALIFIED PRODUCTS LIST FOR BREAKAWAY DEVICES.
4. DO NOT USE BRACE ANGLES.
5. DRAWING NOT TO SCALE.

ORIGINAL STORED AT: ITD, Headquarters 3311 West State Boise, Idaho

ORIGINAL SIGNED BY: RYAN D. LANCASTER DATE ORIGINAL SIGNED: JANUARY 9, 2017

REVISIONS								
NO.	DATE	BY	NO.	DATE	BY	NO.	DATE	BY
1	02-92	JEC	6	05-15	HEB			
2	12-94	HEB	7	12-16	HEB			
3	06-99	HEB						
4	12-01	NQB						
5	12-13	HEB						

SCALES SHOWN ARE FOR 11" X 17" PRINTS ONLY

CADD FILE NAME: i8f_1216.dgn

DRAWING DATE: JULY, 1991

IDAHO TRANSPORTATION DEPARTMENT

BOISE IDAHO

ORIGINAL SIGNED BY: TED MASON

DESIGN/TRAFFIC SERVICES ENGINEER

STANDARD DRAWING

BREAKAWAY STEEL SIGN POSTS TYPE E

English

STANDARD DRAWING NO.

I-8-F

SHEET 1 OF 1

R1-1 (30"X30")
R1-1A (36"X36")
R1-1B (48"X48")

R1-2 (36"X36"X36")
R1-2A (48"X48"X48")
R1-2B (60"X60"X60")

R2-1 (24"X30")
R2-1A (36"X48")
R2-1B (48"X60")

R2-2 (24"X24")
R2-2A (36"X36")
R2-2B (48"X48")

R3-1L (24"X24")
R3-1AL (36"X36")

R3-1R (24"X24")
R3-1AR (36"X36")

R3-4 (24"X24")
R3-4A (36"X36")

R3-5 LorR (30"X36")

R3-6 LorR (30"X36")

R3-7 LorR (30"X30")
R3-7A LorR (36"X36")
R3-7B LorR (48"X48")

R3-8 LorR (30"X30")
R3-8A LorR (36"X36")
R3-8B LorR (48"X48")

R3-10 (24"X36")
R3-10A (36"X48")

R3-11 (30"X36")

R4-1 (24"X30")
R4-1A (36"X48")
R4-1B (48"X60")

R4-2 (24"X30")
R4-2A (36"X48")
R4-2B (48"X60")

R4-4 (24"X30")
R4-4A (36"X48")
R4-4B (48"X60")

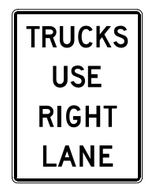

R4-5 (24"X30")
R4-5A (36"X48")
R4-5B (48"X60")

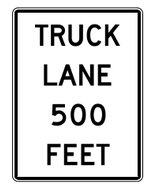

R4-6 (24"X30")
R4-6A (36"X48")
R4-6B (48"X60")

R4-7 (24"X30")
R4-7A (36"X48")
R4-7B (48"X60")

R5-1 (30"X30")
R5-1A (36"X36")

R5-9 (30"X18")
R5-9A (36"X24")

R6-1 LorR (36"X12")

R8-7 (30"X24")
R8-7A (48"X36")

R8-8 (48"X36")

R10-10 LorR (24"X30")
R10-10A LorR (30"X36")

NOTES:

1. ALL SIGNS SHALL BE IN ACCORDANCE WITH THE MANUAL ON UNIFORM TRAFFIC CONTROL DEVICES AS ADOPTED BY THE STATE.
2. SIGNS SHALL BE PUNCHED WITH THE REQUIRED NUMBER OF 3/8" DIAMETER MOUNTING HOLES AS SHOWN ON STANDARD DRAWING I-12-F.
3. DASHED NUMBERS INDICATED ARE VARIABLE.

ORIGINAL STORED AT: ITD, Headquarters 3311 West State Boise, Idaho

ORIGINAL SIGNED BY: CARL D. MAIN DATE ORIGINAL SIGNED: DECEMBER 5, 2013

REVISIONS

NO.	DATE	BY	NO.	DATE	BY	NO.	DATE	BY
1	12-93	HEB						
2	12-01	NQB						
3	07-03	NQB						
4	06-07	HEB						
5	12-13	HEB						

SCALES SHOWN ARE FOR 11" X 17" PRINTS ONLY

CADD FILE NAME: i12a1213.dgn

DRAWING DATE: JANUARY, 1991

IDAHO TRANSPORTATION DEPARTMENT

BOISE IDAHO

ORIGINAL SIGNED BY: RYAN LANCASTER *for*
DESIGN/TRAFFIC SERVICES ENGINEER

STANDARD DRAWING

STANDARD REGULATORY SIGNS

REQUIRES STD. DWG. I-12-F

English

STANDARD DRAWING NO.

I-12-A

SHEET 1 OF 1

W1-1 LorR (30"X30")
W1-1A LorR (36"X36")
✳ W1-1B LorR (48"X48")

W1-2 LorR (30"X30")
W1-2A LorR (36"X36")
✳ W1-2B LorR (48"X48")

W1-3 LorR (30"X30")
W1-3A LorR (36"X36")
✳ W1-3B LorR (48"X48")

W1-4 LorR (30"X30")
W1-4A LorR (36"X36")
✳ W1-4B LorR (48"X48")

W1-5 LorR (30"X30")
W1-5A LorR (36"X36")
W1-5B LorR (48"X48")

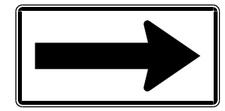

✳ W1-6 LorR (48"X24")
✳ W1-6A LorR (60"X36")

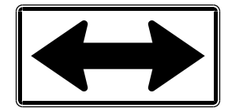

W1-7 (48"X24")
W1-7A (60"X36")

W1-8B LorR (48"X48")

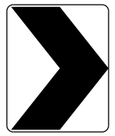

W1-9 (12"X18")
W1-9A (18"X24")
W1-9B (24"X30")

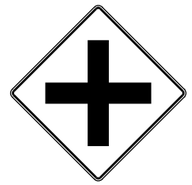

W2-1 (30"X30")
W2-1A (36"X36")
W2-1B (48"X48")

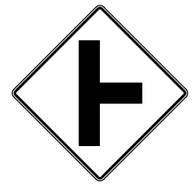

W2-2 (30"X30")
W2-2A (36"X36")
W2-2B (48"X48")

W3-1A (36"X36")
✳ W3-1B (48"X48")

W3-2A (36"X36")
✳ W3-2B (48"X48")

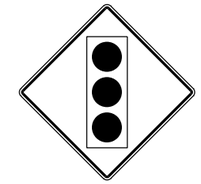

W3-3A (36"X36")
✳ W3-3B (48"X48")

W3-5A (36"X36")
✳ W3-5B (48"X48")

W3-5TA (36"X36")
✳ W3-5TB (48"X48")

W4-1 LorR (30"X30")
W4-1A LorR (36"X36")
W4-1B LorR (48"X48")

W4-2A LorR (36"X36")
✳ W4-2B LorR (48"X48")

W6-1A (36"X36")
✳ W6-1B (48"X48")

W6-2A (36"X36")
✳ W6-2B (48"X48")

W6-3 (30"X30")
W6-3A (36"X36")
✳ W6-3B (48"X48")

W9-1 LorR (30"X30")
W9-1A LorR (36"X36")
✳ W9-1B LorR (48"X48")

W9-2 LorR (30"X30")
W9-2A LorR (36"X36")
✳ W9-2B LorR (48"X48")

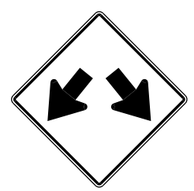

W12-1 (30"X30")
W12-1A (36"X36")
✳ W12-1B (48"X48")

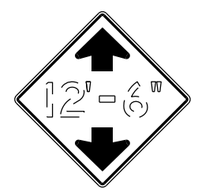

W12-2A (36"X36")
W12-2B (48"X48")

✳ W13-1A (24"X24")

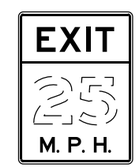

W13-2 (24"X30")
W13-2A (36"X48")
W13-2B (48"X60")

✳ W14-3 (48"X36")

OM-1 (y)or(r) (18"X18")

NOTES:

1. ALL SIGNS SHALL BE IN ACCORDANCE WITH THE CURRENT MANUAL ON UNIFORM TRAFFIC CONTROL DEVICES AS ADOPTED BY THE STATE.
2. SIGNS SHALL BE PUNCHED WITH THE REQUIRED NUMBER OF 3/8" DIAMETER MOUNTING HOLES, AS SHOWN ON STANDARD DRAWING I-12-F.
3. SIGNS INDICATED WITH AN ✳ HAVE EITHER A YELLOW OR AN ORANGE (o) BACKGROUND, DEPENDING ON THEIR USE. THE SIGN NUMBERS SHALL BE DESIGNATED SUCH AS: W1-1L FOR YELLOW OR W1-1L(o) FOR ORANGE.
4. DASHED NUMBERS INDICATED ARE VARIABLE.

ORIGINAL STORED AT: ITD, Headquarters 3311 West State Boise, Idaho

ORIGINAL SIGNED BY: CARL D. MAIN
DATE ORIGINAL SIGNED: DECEMBER 5, 2013

REVISIONS

NO.	DATE	BY	NO.	DATE	BY	NO.	DATE	BY
1	12-93	HEB	6	12-13	HEB			
2	12-01	HEB						
3	07-03	HEB						
4	06-07	HEB						
5	09-11	HEB						

SCALES SHOWN ARE FOR 11" X 17" PRINTS ONLY

CADD FILE NAME: i12d1213.dgn

DRAWING DATE: DECEMBER, 1993

IDAHO TRANSPORTATION DEPARTMENT

BOISE IDAHO

ORIGINAL SIGNED BY: RYAN LANCASTER *for*
DESIGN/TRAFFIC SERVICES ENGINEER

STANDARD DRAWING

STANDARD WARNING SIGNS

REQUIRES STD. DWG. I-12-F

English

STANDARD DRAWING NO.

I-12-D

SHEET 1 OF 1

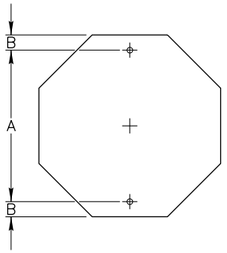

SIGN SIZE	A	B
30"X30"	24"	3"

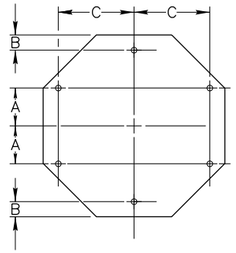

SIGN SIZE	A	B	C
36"X36"	8"	3"	12"
48"X48"	10"	—	20"

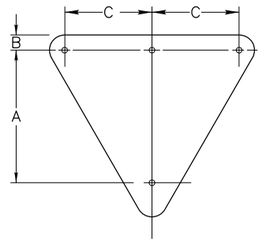

SIGN SIZE	A	B	C
30"X30"	18"	3"	—
36"X36"	23"	3"	—
48"X48"	25"	3"	17"
60"X60"	35"	4"	23"

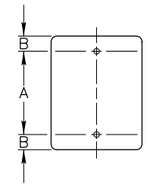

SIGN SIZE	A	B
6"X12"	9"	1½"
6"X18"	15"	1½"
9"X12"	9"	1½"
12"X18"	15"	1½"
12"X30"	24"	3"
12"X36"	32"	2"
18"X24"	18"	3"
24"X30"	24"	3"
24"X36"	30"	3"
30"X36"	30"	3"

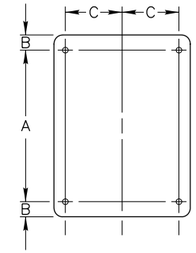

SIGN SIZE	A	B	C
36"X36"	30"	3"	15"
36"X48"	42"	3"	15"
48"X30"	24"	3"	15"
48"X36"	30"	3"	15"
60"X36"	30"	3"	21"

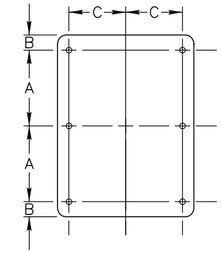

SIGN SIZE	A	B	C
48"X60"	27"	3"	15"

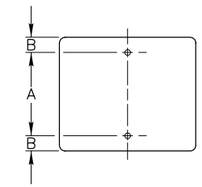

SIGN SIZE	A	B
12"X6"	3"	1½"
18"X9"	6"	1½"
18"X12"	9"	1½"
18"X18"	15"	1½"
21"X15"	12"	1½"
24"X6"	3"	1½"
24"X10"	7"	1½"
24"X12"	9"	1½"
24"X18"	15"	1½"
24"X24"	18"	3"
30"X18"	12"	3"
30"X24"	18"	3"
30"X30"	24"	3"
36"X24"	18"	3"
36"X30"	24"	3"
42"X24"	18"	3"
42"X30"	24"	3"
42"X36"	30"	3"

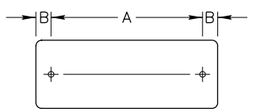

SIGN SIZE	A	B
30"X15"	24"	3"
36"X12"	30"	3"
36"X18"	30"	3"
48"X12"	42"	3"
48"X18"	42"	3"
54"X18"	48"	3"

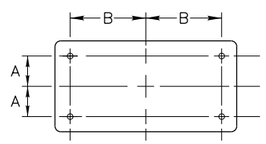

SIGN SIZE	A	B
48"X24"	9"	20"

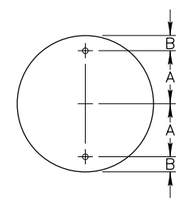

SIGN SIZE	A	B
36"	15"	3"
48"	21"	3"

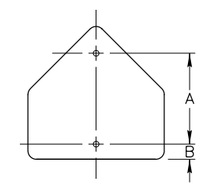

SIGN SIZE	A	B
30"X30"	21"	3"
36"X36"	24"	3"

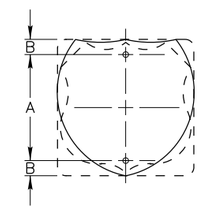

SIGN SIZE	A	B
24"X24"	18"	3"
30"X24"	18"	3"

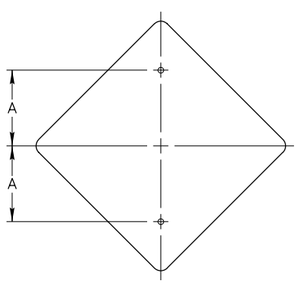

SIGN SIZE	A
18"X18"	10"
24"X24"	12"
30"X30"	15"

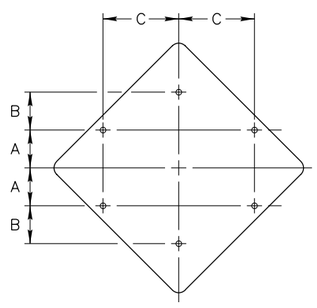

SIGN SIZE	A	B	C
36"X36"	8"	10"	12"
48"X48"	10"	—	20"

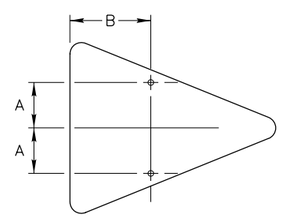

SIGN SIZE	A	B
36"X48"	9"	16"

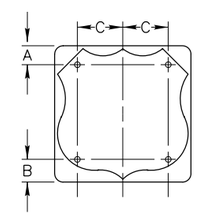

SIGN SIZE	A	B	C
36"X36"	5"	6"	12"

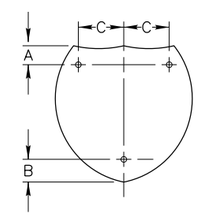

SIGN SIZE	A	B	C
36"X36"	5"	6"	12"
45"X36"	5"	6"	16"

NOTES:

1. ALL MOUNTING HOLES SHALL BE ⅜" DIAMETER.

ORIGINAL STORED AT: ITD, Headquarters 3311 West State Boise, Idaho

ORIGINAL SIGNED BY: RYAN D. LANCASTER
DATE ORIGINAL SIGNED: JULY 14, 2014

REVISIONS

NO.	DATE	BY	NO.	DATE	BY	NO.	DATE	BY
1	12-01	NQB						
2	06-07	HEB						
3	07-14	HEB						

SCALES SHOWN ARE FOR 11" X 17" PRINTS ONLY

CADD FILE NAME: i12f0714.dgn

DRAWING DATE: DECEMBER, 1994

IDAHO TRANSPORTATION DEPARTMENT

BOISE IDAHO

ORIGINAL SIGNED BY: CARL D. MAIN
DESIGN/TRAFFIC SERVICES ENGINEER

STANDARD DRAWING

PUNCHING SCHEDULE FOR TYPE "B" OR TYPE "E" SIGNS

English

STANDARD DRAWING NO. I-12-F

SHEET 1 OF 1

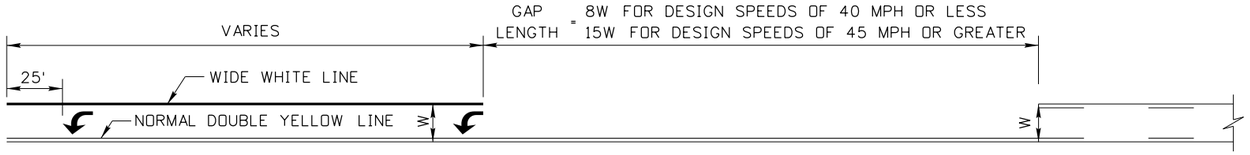

10', 12' AND 14' MEDIAN WIDTH

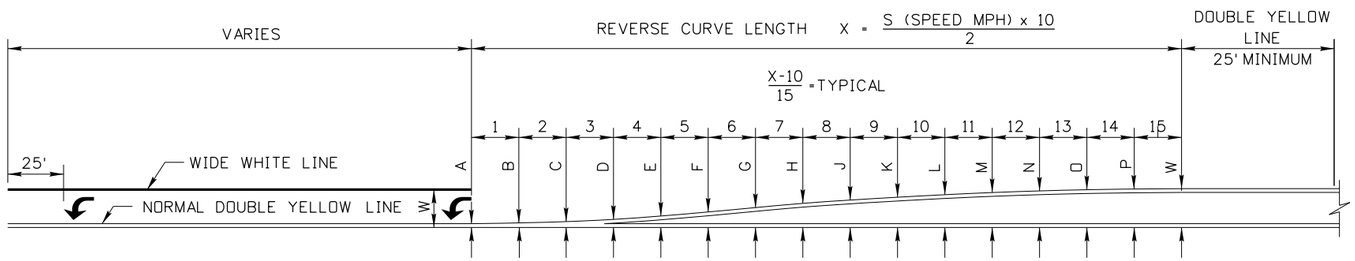

W	A	B	C	D	E	F	G	H	J	K	L	M	N	O	P	W
12.0'	.9'	1.1'	1.5'	2.2'	3.3'	4.6'	6.0'	7.3'	8.4'	9.3'	10.1'	10.8'	11.3'	11.7'	11.9'	12.0'
14.0'	3.0'	3.1'	3.6'	4.3'	5.3'	6.7'	8.1'	9.3'	10.4'	11.4'	12.2'	12.8'	13.3'	13.7'	13.9'	14.0'

12' AND 14' MEDIAN WIDTH

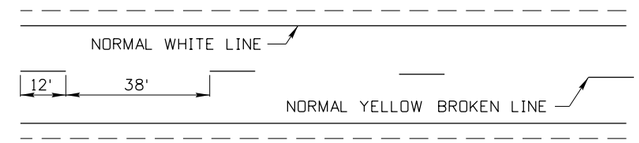

TWO-WAY ROADWAY MARKINGS

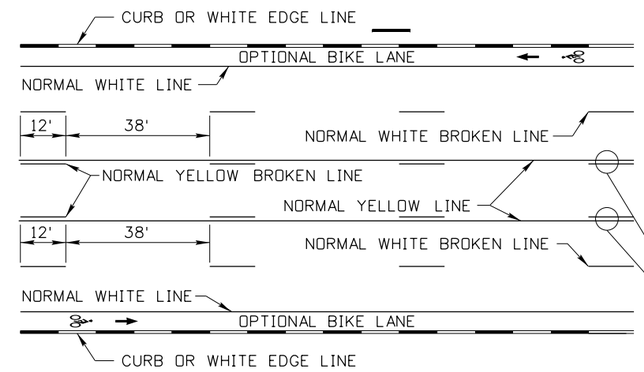

FIVE LANE ROADWAY MARKINGS

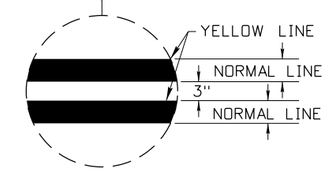

DETAIL "A"

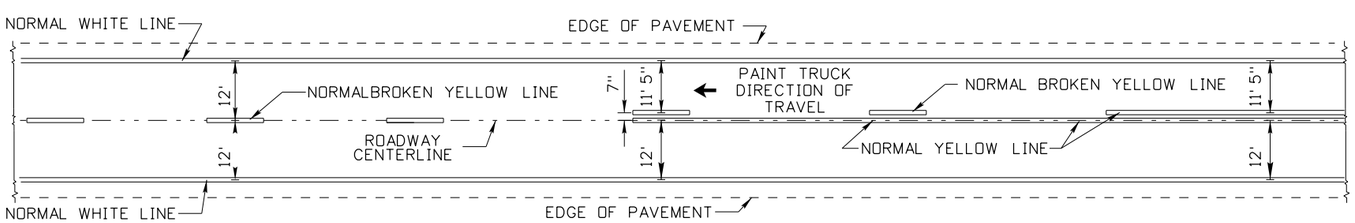

PLACEMENT OF LANE LINE MARKINGS
ON TWO-WAY ROADWAY

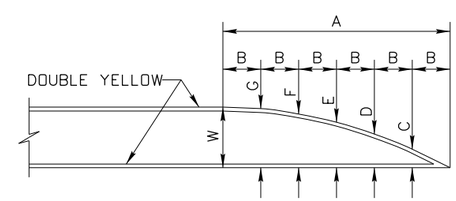

W	A	B	C	D	E	F	G
10.0'	60.0'	10.0'	3.1'	5.6'	7.5'	8.9'	9.7'
12.0'	60.0'	10.0'	3.7'	6.7'	9.0'	10.7'	11.7'
14.0'	60.0'	10.0'	4.3'	7.8'	10.5'	12.4'	13.6'
16.0'	60.0'	10.0'	4.9'	8.9'	12.0'	14.2'	15.6'

OFFSET NOSE
(OPTIONAL)

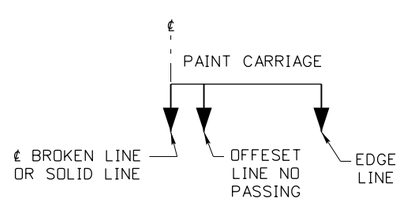

PAINT TRUCK SETUP

NOTES:

1. NORMAL LINES ARE 4" TO 6" WIDE.
2. WIDE LINES ARE TO BE AT LEAST TWICE THE WIDTH OF A NORMAL LINE.
3. WHEN EDGE LINES ARE USED ON HIGHWAYS LESS THAN 24' WIDE, PLACE THE EDGE LINE 6" FROM THE EDGE OF PAVEMENT.
4. DRAWING NOT TO SCALE.

ORIGINAL STORED AT: ITD, Headquarters 3311 West State Boise, Idaho

ORIGINAL SIGNED BY: RYAN D. LANCASTER
DATE ORIGINAL SIGNED: DECEMBER 6, 2016

REVISIONS								
NO.	DATE	BY	NO.	DATE	BY	NO.	DATE	BY

SCALES SHOWN ARE FOR 11" X 17" PRINTS ONLY

CADD FILE NAME: i21_1216.dgn

DRAWING DATE: DECEMBER, 2016

IDAHO TRANSPORTATION DEPARTMENT

BOISE IDAHO

ORIGINAL SIGNED BY: TED MASON
DESIGN/TRAFFIC SERVICES ENGINEER

STANDARD DRAWING

PAVEMENT MARKINGS FOR ARTERIAL AND COLLECTOR ROADWAYS

English

STANDARD DRAWING NO.
I-21

SHEET 1 OF 1

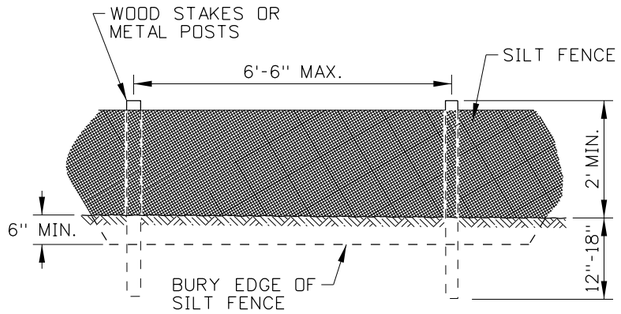

SILT FENCE (NO WIRE BACKING)

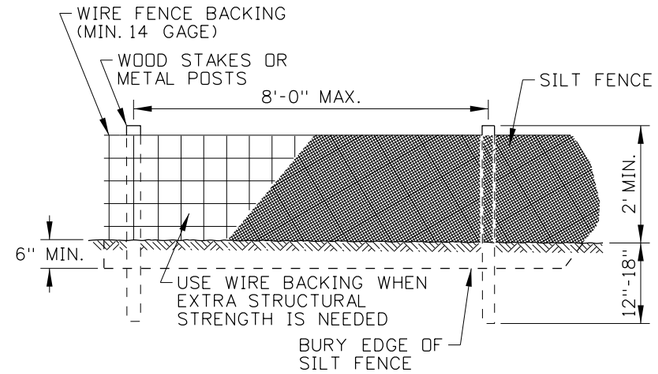

SILT FENCE (WIRE BACKING)

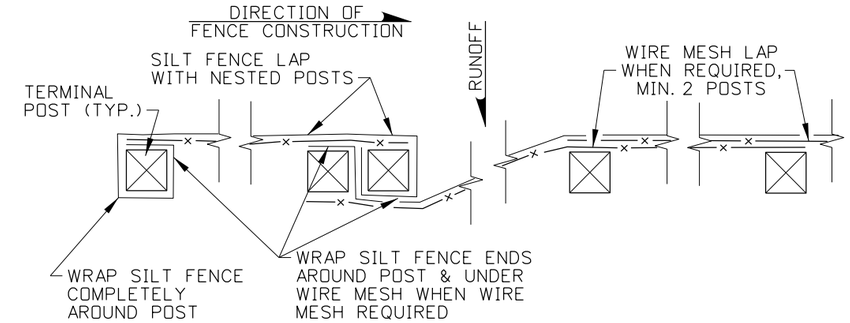

SILT FENCE LAP DETAIL

FIBER WATTLE & COMPOST SOCK SPACING TABLE				
SLOPE	WATTLE SIZE			
	6"	9"	12"	20"
1:1	5 FT	10 FT	15 FT	20 FT
2:1	10 FT	20 FT	30 FT	40 FT
3:1	15 FT	30 FT	45 FT	60 FT
4:1 OR FLATTER	20 FT	40 FT	60 FT	80 FT

SILT FENCE SPACING TABLE			
SLOPE	SOIL TYPE		
	SILTY	CLAYS	SANDY
1:1	50 FT	75 FT	100 FT
2:1	75 FT	100 FT	125 FT
4:1	100 FT	125 FT	150 FT
10:1 OR FLATTER	125 FT	150 FT	200 FT

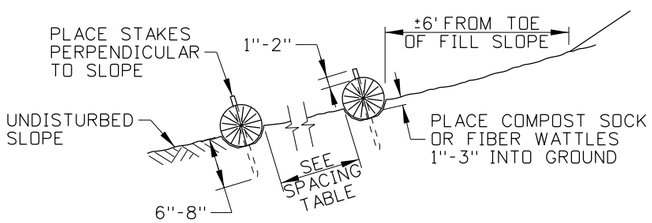

COMPOST SOCK AND FIBER WATTLE

SIDE VIEW

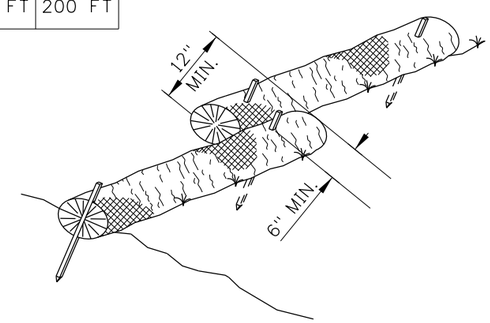

COMPOST SOCK AND FIBER WATTLE OVERLAPPING DETAIL

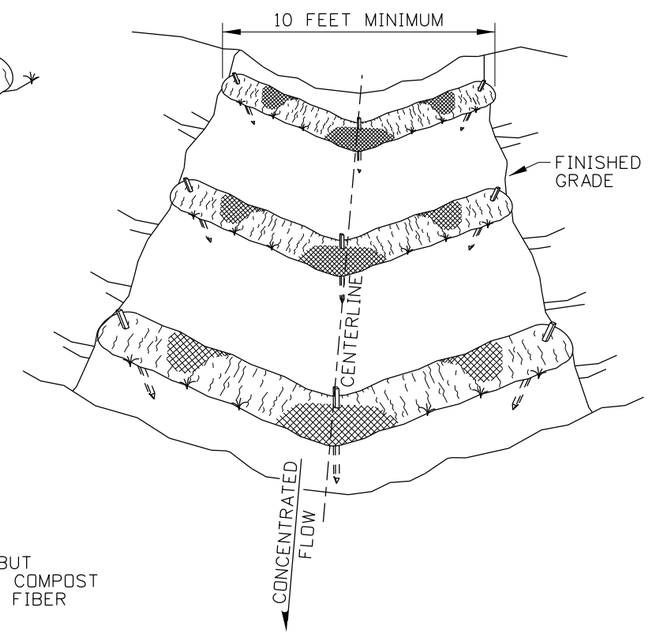

COMPOST SOCK AND FIBER WATTLE TEMPORARY CHECK DAM DETAIL

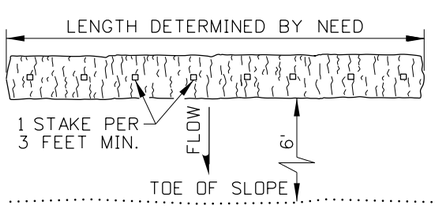

PLACE WATTLES PARALLEL TO TOE OF SLOPE OR ALONG SLOPE CONTOUR

COMPOST SOCK AND FIBER WATTLE

PLAN VIEW

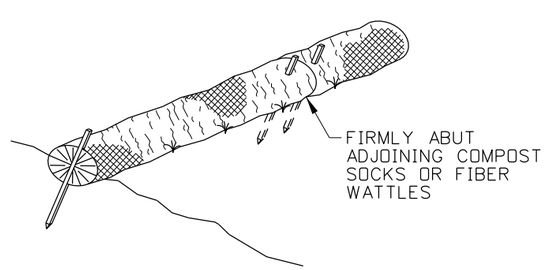

COMPOST SOCK AND FIBER WATTLE ABUTTING DETAIL

NOTES

1. THE GENERAL NOTES FOR ALL P-1 SERIES STANDARD DRAWINGS (TEMPORARY EROSION CONTROL) ARE GIVEN ON STANDARD DRAWING P-1-D.

2. INSTALL TEMPORARY SEDIMENT CONTROL BARRIERS IN ACCORDANCE WITH MANUFACTURERS INSTRUCTIONS AND SPECIFICATIONS. THE DIMENSIONS SHOWN ARE GENERAL GUIDELINES.

3. PLACE SEDIMENT BARRIERS TO FOLLOW THE SLOPE CONTOURS. METAL POSTS OR WOOD STAKES MAY BE USED.

4. ENSURE THAT RUNOFF PASSES THROUGH THE SILT FENCE AND NOT AROUND THE FENCE.

5. ENSURE THAT SILT FENCE MATERIAL IS IN ACCORDANCE WITH 718.09 OF THE STANDARD SPECIFICATIONS FOR HIGHWAY CONSTRUCTION.

6. GROUND SILT FENCES WITH WIRE MESH IN ACCORDANCE WITH THE GROUNDING DETAIL SHOWN ON STANDARD DRAWING F-2-A.

7. THE NEED FOR TEMPORARY SEDIMENT CONTROL DEVICES ARE DETERMINED BY SITE DESIGN. SPACE SILT FENCES, COMPOST SOCKS, AND FIBER WATTLES IN ACCORDANCE WITH THE SILT FENCE SPACING TABLE AND FIBER WATTLE & COMPOST SOCK SPACING TABLE.

8. ON SLOPES, TURN THE ENDS OF EACH ROW OF COMPOST SOCKS AND FIBER WATTLES UPSLOPE TO PREVENT RUNOFF FROM FLOWING AROUND THE SOCK OR WATTLE.

9. EXTEND OR JOIN SILT FENCE USING SILT FENCE LAP WITH NESTED POSTS.

10. REMOVE SEDIMENT FROM THE UPSLOPE SIDE OF SILT FENCES, COMPOST SOCKS, AND FIBER WATTLES WHEN ACCUMULATION HAS REACHED ½ OF THE EFFECTIVE HEIGHT OF THE BARRIER.

11. NOT TO SCALE.

ORIGINAL STORED AT: ITD, Headquarters 3311 West State Boise, Idaho

ORIGINAL SIGNED BY: J. CALEB LAKEY DATE ORIGINAL SIGNED: FEBRUARY 1, 2013

REVISIONS								
NO.	DATE	BY	NO.	DATE	BY	NO.	DATE	BY
1	09-93	MSM	6	01-13	RDL			
2	12-94	MSM						
3	06-96	GFK						
4	10-10	KEH						
5	10-11	KEH						

SCALES SHOWN ARE FOR 11" X 17" PRINTS ONLY

CADD FILE NAME: p1b_0213.std

DRAWING DATE: APRIL, 1993

IDAHO TRANSPORTATION DEPARTMENT

BOISE IDAHO

ORIGINAL SIGNED BY: LOREN THOMAS
HIGHWAYS PROGRAM OVERSIGHT ENGINEER
ORIGINAL SIGNED BY: TOM COLE
CHIEF ENGINEER

STANDARD DRAWING

TEMPORARY SEDIMENT CONTROL BARRIERS

REQUIRES STD. DWG. P-1-D

English

STANDARD DRAWING NO.

P-1-B

SHEET 1 OF 1

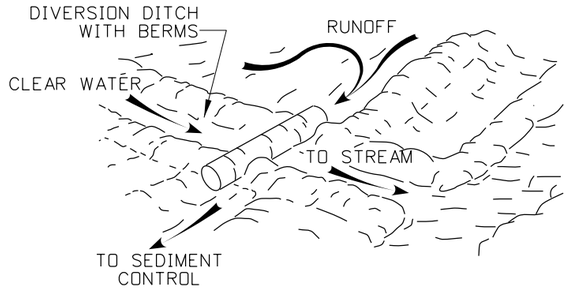

CLEAR WATER DIVERSION

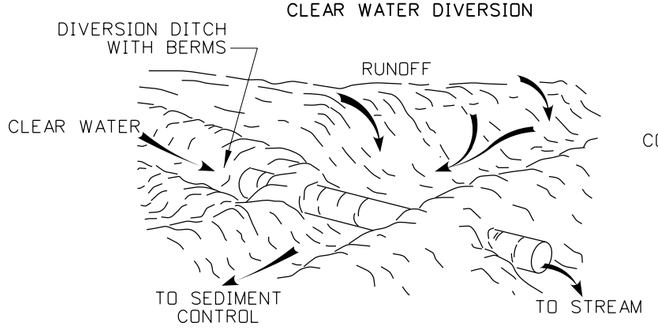

RUNOFF DIVERSION

PIPED DIVERSIONS

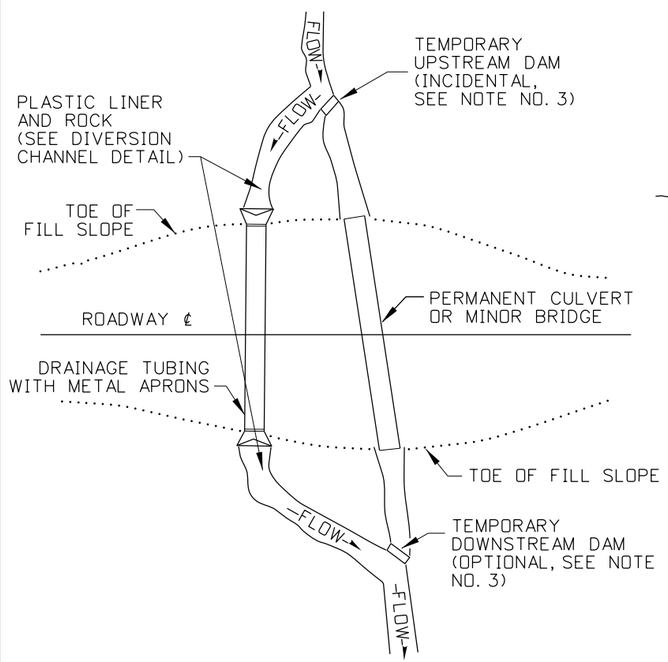

DIVERSION CHANNEL

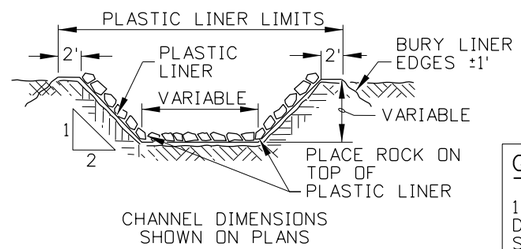

DIVERSION CHANNEL DETAIL

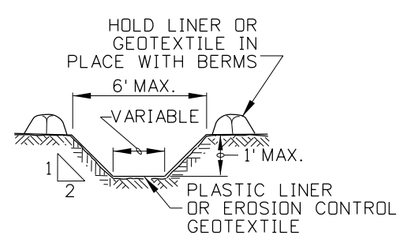

TO BE USED ONLY FOR CLEAR WATER

DIVERSION DITCH

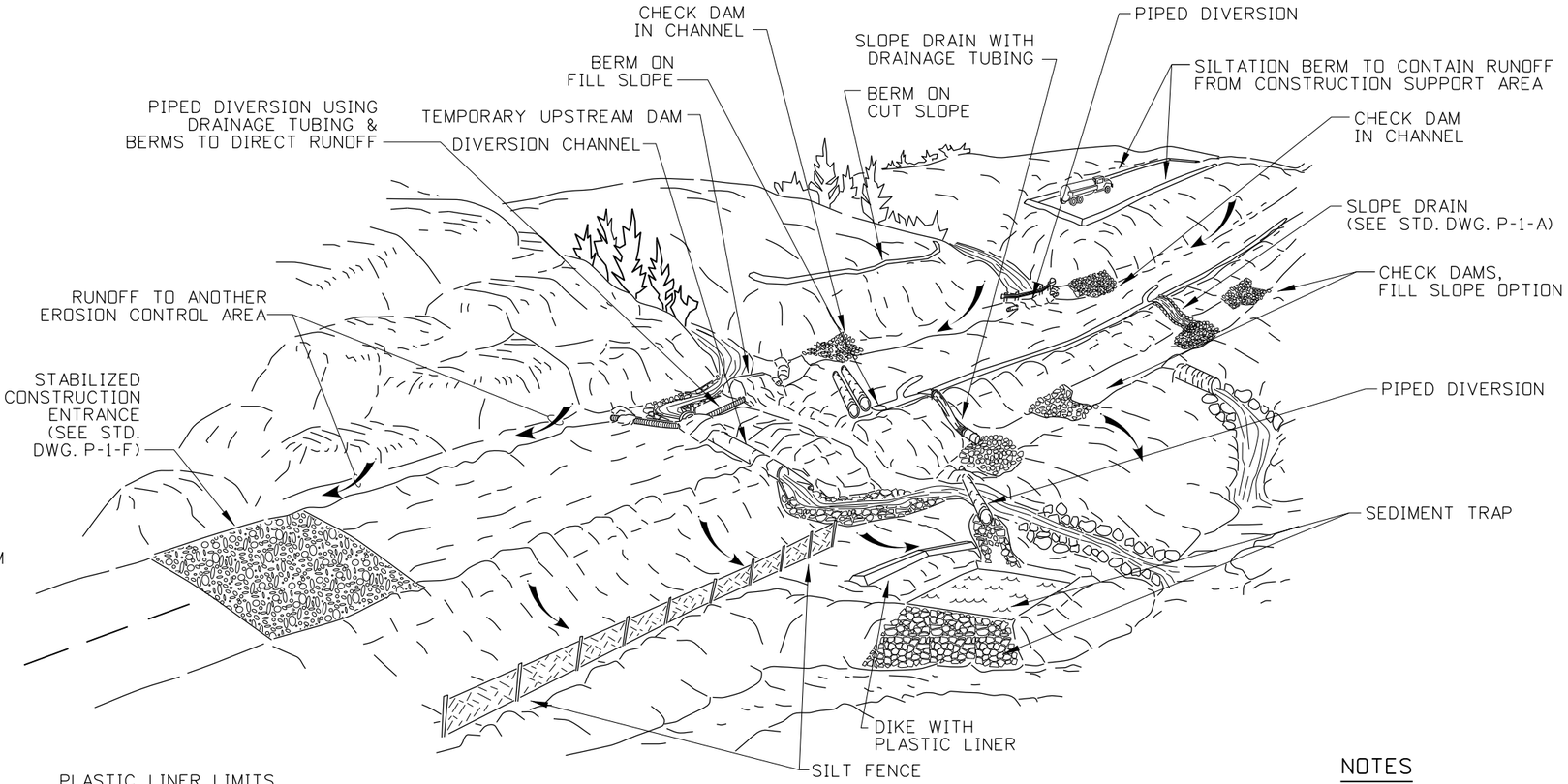

SITE EXAMPLE

GENERAL NOTES FOR TEMPORARY EROSION CONTROL

1. USE TEMPORARY EROSION CONTROL DEVICES STANDARD DRAWINGS IN CONJUNCTION WITH THE STANDARD SPECIFICATIONS FOR HIGHWAY CONSTRUCTION AND THE ITD BEST MANAGEMENT PRACTICES MANUAL.

2. SEE PLANS FOR SITE DIMENSIONS.

3. THE PLACEMENT OF TEMPORARY EROSION CONTROL MEASURES IS SITE SPECIFIC. OBTAIN THE ENGINEER'S APPROVAL OF THE TEMPORARY EROSION CONTROL MEASURES PRIOR TO INSTALLATION.

4. TEMPORARY EROSION CONTROL DEVICES ARE NOT INTENDED TO LAST MORE THAN 6 MONTHS OR UNTIL THEY ARE INTEGRATED INTO A FINAL EROSION CONTROL SYSTEM.

NOTES

1. SEE THE GENERAL NOTES FOR TEMPORARY EROSION CONTROL.

2. CONSTRUCT DIVERSION CHANNELS AS SHOWN ON THE PLANS. CONSTRUCT THE CHANNEL SIZE, ALIGNMENT, SLOPE, ROCK SIZE AND TYPE, AND PLASTIC LINER AS SHOWN ON THE PLANS OR AS DIRECTED BY THE ENGINEER.

3. USE A TEMPORARY DAM TO DIVERT ALL WATER INTO THE DIVERSION CHANNEL. A TEMPORARY DOWNSTREAM DAM IS OPTIONAL AND MAY BE USED TO PREVENT WATER FROM RETURNING TO THE UPSTREAM WORK AREA.

4. PLACE A PLASTIC LINER ALONG THE LENGTH AND WIDTH OF THE DIVERSION CHANNEL. OVERLAP THE PLASTIC LINER EDGES 2 FEET. SECURE PLASTIC LINER EDGES WITH BERMS, ROCKS, OR OTHER SUITABLE MATERIALS.

5. DIVERSION DITCHES ARE PRIMARILY FOR CLEAR WATER. WHEN THE FLOW EXCEEDS 0.25 CUBIC FEET PER SECOND, USE A DIVERSION CHANNEL.

6. NOT TO SCALE.

ORIGINAL STORED AT: ITD, Headquarters 3311 West State Boise, Idaho

ORIGINAL SIGNED BY: J. CALEB LAKEY DATE ORIGINAL SIGNED: DECEMBER 17, 2012

REVISIONS								
NO.	DATE	BY	NO.	DATE	BY	NO.	DATE	BY
1	9-93	MSM						
2	6-96	MSM						
3	10-10	KEH						
4	10-11	KEH						
5	12-12	RDL						

SCALES SHOWN ARE FOR 11" X 17" PRINTS ONLY

CADD FILE NAME: p1d_1212.std

DRAWING DATE: APRIL, 1993

IDAHO TRANSPORTATION DEPARTMENT

BOISE IDAHO

ORIGINAL SIGNED BY: LOREN THOMAS
HIGHWAYS PROGRAM OVERSIGHT ENGINEER
ORIGINAL SIGNED BY: TOM COLE
CHIEF ENGINEER

STANDARD DRAWING

TEMPORARY EROSION CONTROL DIVERSION DEVICES & SITE EXAMPLE

English

STANDARD DRAWING NO.

P-1-D

SHEET 1 OF 1

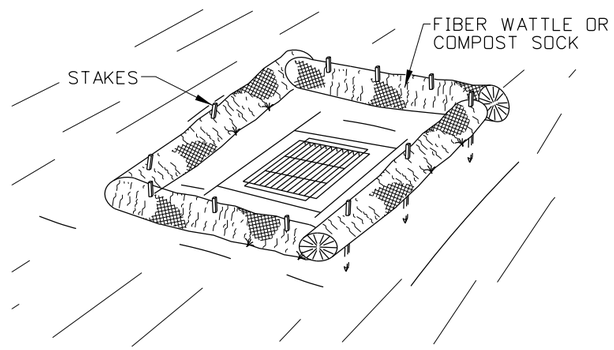

FIBER WATTLE FILTER

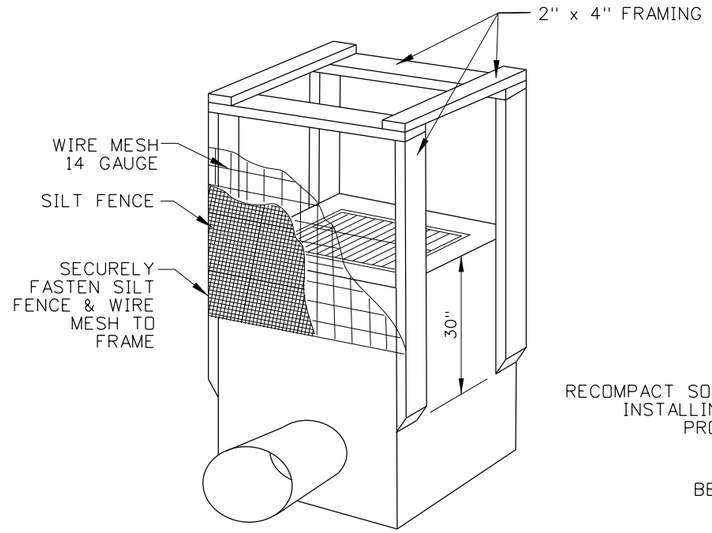

PERSPECTIVE VIEW

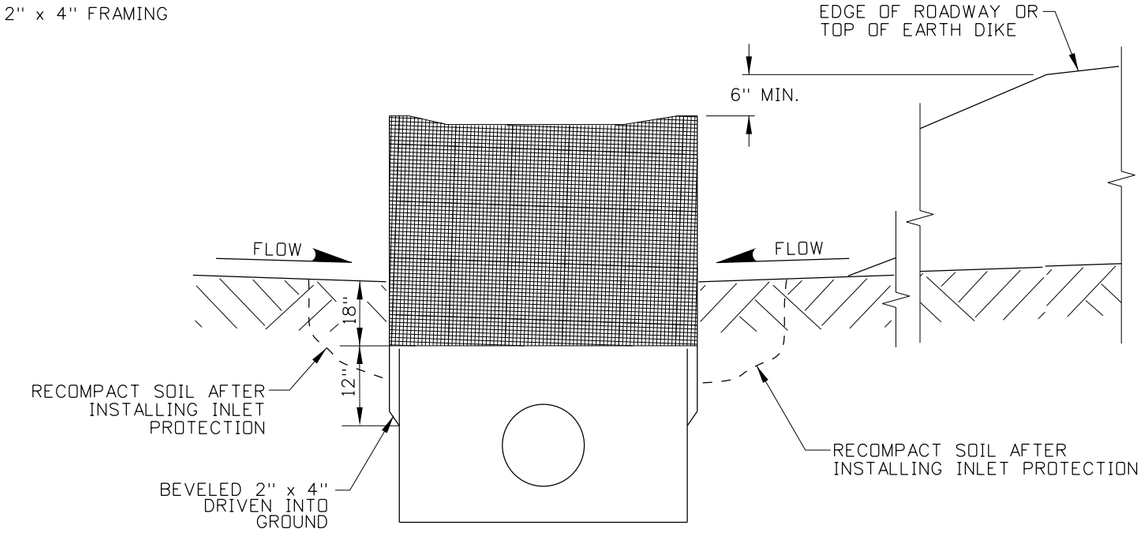

ELEVATION

FRAMED WIRE/FABRIC FILTER

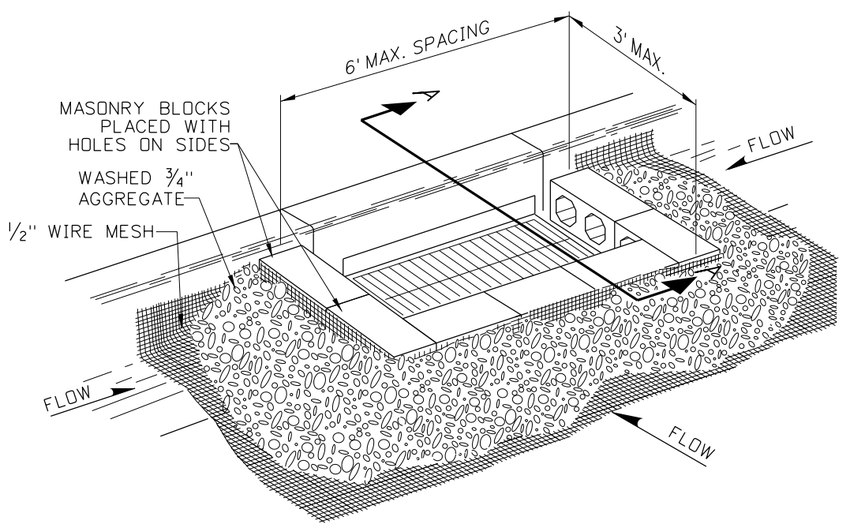

GRAVEL AND WIRE MESH FILTER

PERIMETER FILTER

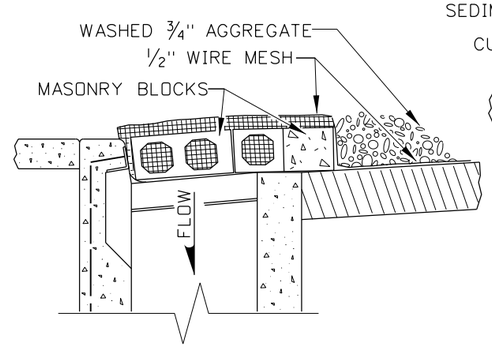

SECTION A-A

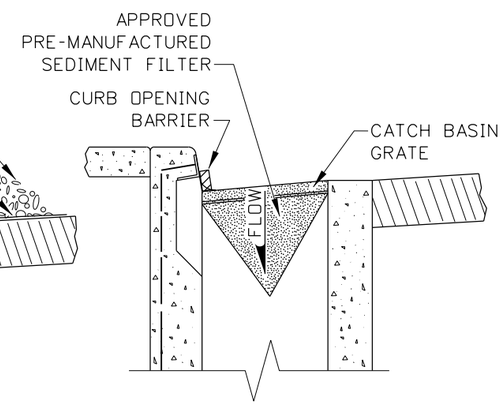

PRE-MANUFACTURED SEDIMENT FILTER FOR INLET GRATE

NOTES

1. THE GENERAL NOTES FOR ALL P-1 SERIES STANDARD DRAWINGS (TEMPORARY EROSION CONTROL) ARE GIVEN ON STANDARD DRAWING P-1-D.

2. REMOVE TRASH, DEBRIS, DUFF, AND MATERIALS THAT MAY INTERFERE WITH THE INLET OR CATCH BASIN PROTECTION FUNCTION PRIOR TO PLACEMENT AND THEREAFTER ON A DAILY BASIS OR AS NEEDED.

3. FIELD ADJUSTMENTS MAY BE NECESSARY TO ENSURE EFFECTIVENESS.

4. FRAMED WIRE/FABRIC FILTER AND FIBER WATTLE FILTERS ARE INTENDED TO BE USED ON ANY STRUCTURE NOT PRESENTLY SURROUNDED BY PAVEMENT.

5. GRAVEL AND WIRE MESH FILTER AND PRE-MANUFACTURED SEDIMENT FILTER INSTALLATIONS ARE INTENDED TO BE USED ON STRUCTURES SURROUNDED BY PAVEMENT WITH OR WITHOUT CURBS.

6. ENSURE THAT WATER DISCHARGING FROM THE INLET MEETS APPLICABLE WATER QUALITY STANDARDS.

7. NOT TO SCALE.

ORIGINAL STORED AT: ITD, Headquarters 3311 West State Boise, Idaho

ORIGINAL SIGNED BY: J. CALEB LAKEY DATE ORIGINAL SIGNED: FEBRUARY 1, 2013

REVISIONS

NO.	DATE	BY	NO.	DATE	BY	NO.	DATE	BY
1	10-10	KEH						
2	10-11	KEH						
3	01-13	RDL						

SCALES SHOWN ARE FOR 11" X 17" PRINTS ONLY

CADD FILE NAME: p1h_0213.std

DRAWING DATE: JUNE, 1996

IDAHO TRANSPORTATION DEPARTMENT

BOISE IDAHO

ORIGINAL SIGNED BY: LOREN THOMAS
HIGHWAYS PROGRAM OVERSIGHT ENGINEER
ORIGINAL SIGNED BY: TOM COLE
CHIEF ENGINEER

STANDARD DRAWING

TEMPORARY SEDIMENT CONTROL INLET PROTECTION

REQUIRES STD. DWG. P-1-D

English

STANDARD DRAWING NO.

P-1-H

SHEET 1 OF 1

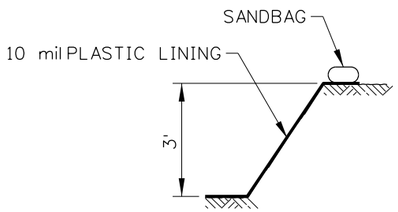

SECTION A-A

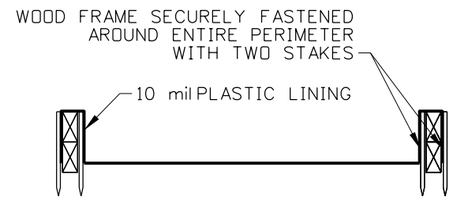

SECTION B-B

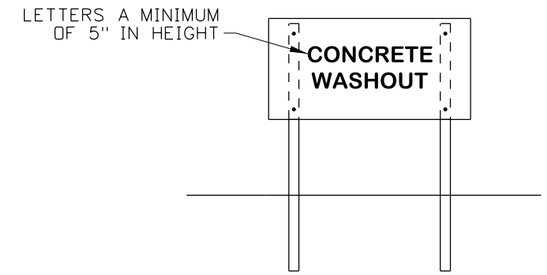

CONCRETE WASHOUT SIGN DETAIL
(SEE NOTE NO. 2)

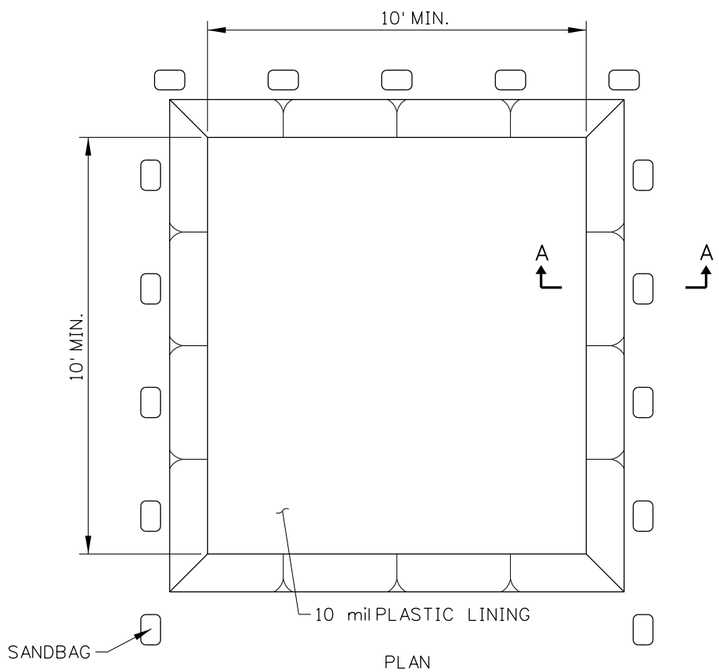

TYPE BELOW GRADE

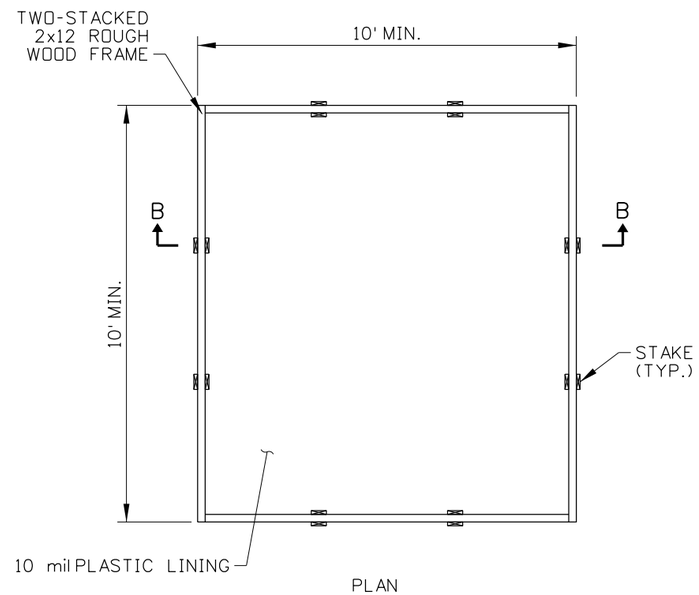

TYPE ABOVE GRADE

NOTES

1. USE THIS DRAWING IN CONJUNCTION WITH THE ITD BEST MANAGEMENT PRACTICES (BMP) MANUAL.
2. ACTUAL LAYOUT DETERMINED IN THE FIELD
3. INSTALL THE CONCRETE WASHOUT SIGN WITHIN 30 FEET OF THE TEMPORARY CONCRETE WASHOUT FACILITY.
4. USE OF PREFABRICATED TEMPORARY WASHOUT MAY ONLY BE USED ON APPROVAL BY THE ENGINEER.
5. NOT TO SCALE.

ORIGINAL STORED AT: ITD, Headquarters 3311 West State Boise, Idaho

ORIGINAL SIGNED BY: J. CALEB LAKEY DATE ORIGINAL SIGNED: NOVEMBER 20, 2013

REVISIONS								
NO.	DATE	BY	NO.	DATE	BY	NO.	DATE	BY
1	11-13	RDL						

SCALES SHOWN ARE FOR 11" X 17" PRINTS ONLY

CADD FILE NAME: p5b_1113.dgn

DRAWING DATE: OCTOBER, 2010

IDAHO TRANSPORTATION DEPARTMENT

BOISE IDAHO

ORIGINAL SIGNED BY: TOM COLE *for*
HIGHWAYS PROGRAM OVERSIGHT ENGINEER
ORIGINAL SIGNED BY: TOM COLE
CHIEF ENGINEER

STANDARD DRAWING

TEMPORARY CONCRETE WASHOUT

English

STANDARD DRAWING NO.

P-5-B

SHEET 1 OF 1